COUGAR SV
Takes 2wd to the next level

Driver and Event

Name	Philip Jeisy
Date	18/19. September 2010
Event	4. SM-Lauf Dielsdorf
Weather	Hallle, 18 Grad-Celsius
Result	3.Rang

Track Conditions

Surface	Lehm
Grip Level	Medium-High, Bumpy
Track Condition	

Driver Notes

-Saddle-Pack Layout
-Dämpfer vorne und hinten mit 100% Rebound
-Regler: Powerprogramm 6, Autobreak 2
-20g Blei hinten
-grosser Heckflügel, Frontflügel
-Schwingen vorne gedreht
-Hintere 2 Pfosten Oberdeck demontiert

Electrics and Gearing

E.S.C	LRP TC Spec
Servo	Futaba
Reciever	Futaba
Batteries	Speedpassion 4200
Motor	Speedpassion 7.5T
Spur	Std.
Pinion	23T
Ext Gears	34/22 [X] 33/23 [ ] 32/24 [ ]

Wheels and Tyres

Rear Wheels	Proline Bowtie auf Schumacherfelgen
Rear Tyre	Proline Bowtie auf Schumacherfelgen
Rear Insert	Standart
Front Wheels	Proline M3 auf Schumacherfelgen
Front Tyre	Proline M3 (Schmal)
Front Insert	Standart

Differential Height

High [ ] Low [X]

Topdeck

Stiff [ ] Medium [X] Soft [ ]

Rear Shocks

Oil 30 | Spring 2.0 | Ball Socket Short [ ] Long [X]

Piston Holes 2 [ ] 3 [ ] 4 [ ] 5 [ ] 6 [X]

Shock Length +5mm

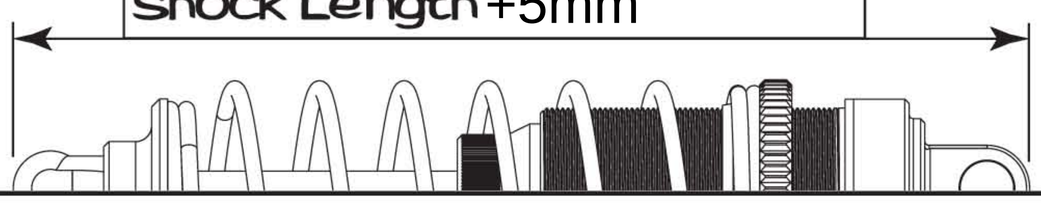

Front Shocks

Oil 30 | Spring 3.0

Piston Holes 2 [ ] 3 [ ] 4 [X] 5 [ ] 6 [ ]

Shock Length Std.

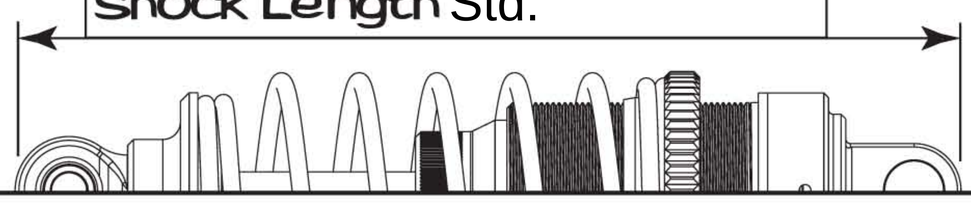

Rear Suspension

Anti roll bar No [X] 1.20 [ ] 1.40 [ ] 1.60 [ ]

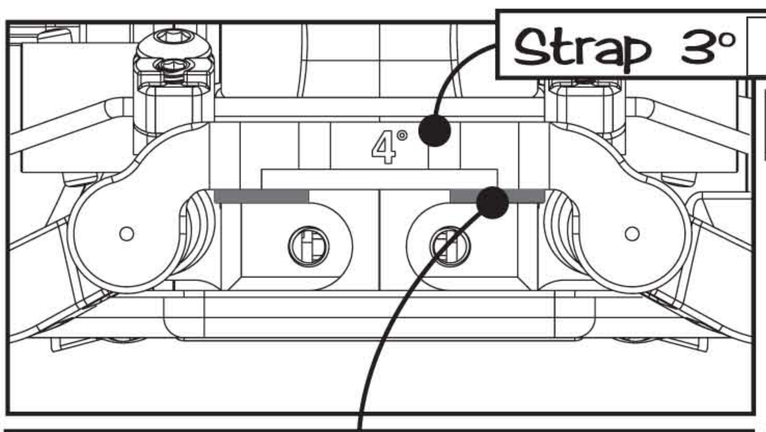

Strap 3° [ ] 4° [X] 5° [ ]

Äntisquat Washers Std. mm

Link Washers Std. mm

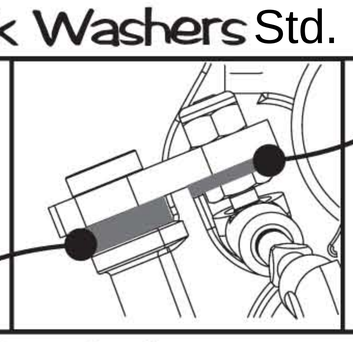

Link Washers oberhalb mm

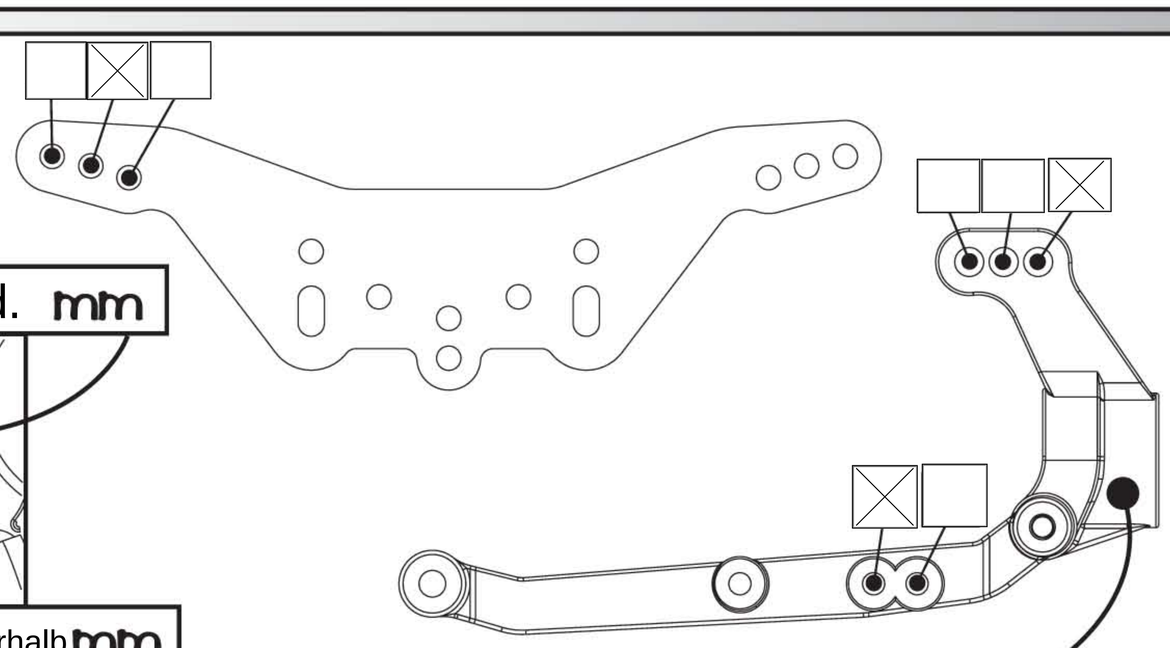

Rear Hub Carrier Alloy [ ] Std [X]

Alloy Hub Carrier +1° [ ] -1° [ ]

Shock Postion Front [ ] Rear [X]

Wheelbase Short [ ] Med [X] Long [ ]

Rear Camber at Ride Height -2.5

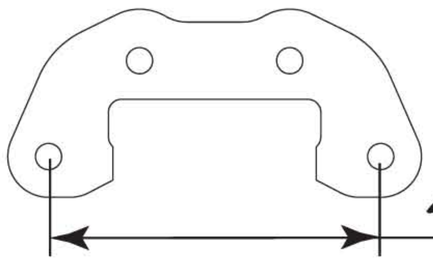

49 [ ] 44 [ ] 39 [X] 34 [ ]

Front Suspension

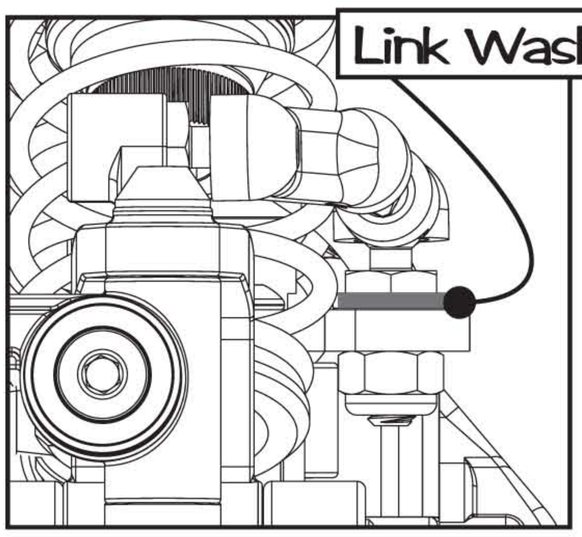

Link Washers Std. mm

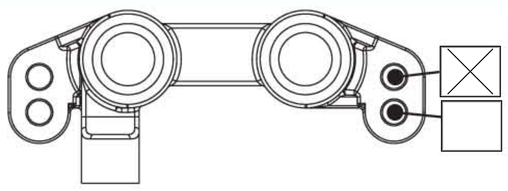

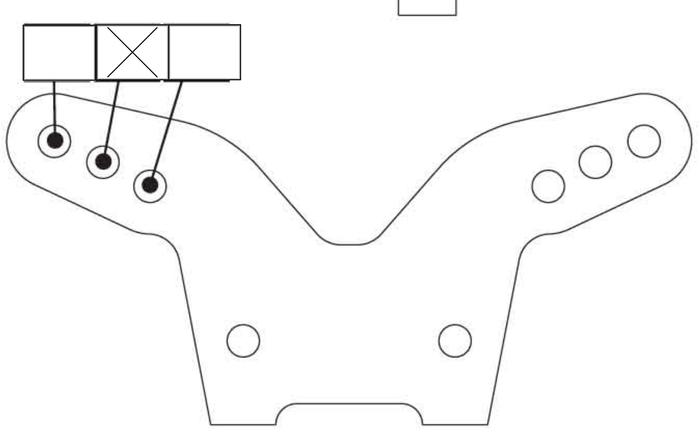

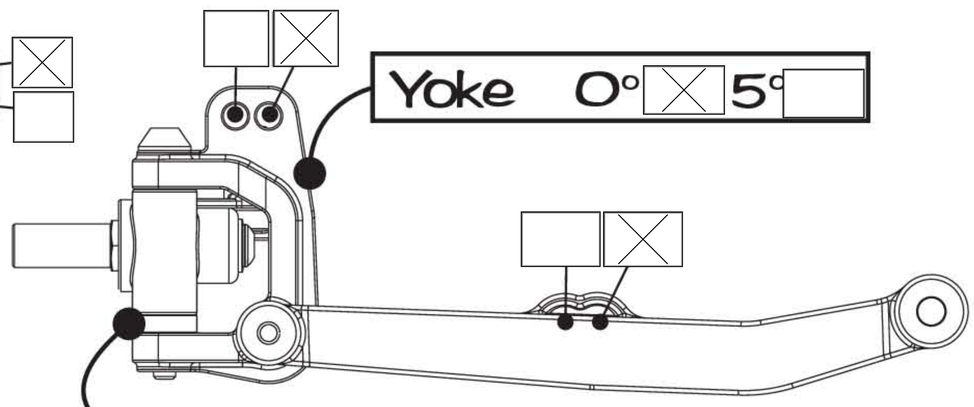

Yoke 0° [X] 5° [ ]

Hub Carrier High [ ] Low [X]

Front Camber at Ride Height -1

Front Toe In 0

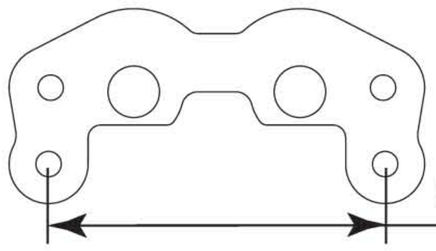

50.5 [ ] 45.5 [ ] 40.5 [X]

Editable fields by Pavel Balint (lochness42.eu)