Driver and Event

Name	Simon Moss
Date	
Event	Worksop - starting setup
Weather	
Result	

Track Conditions

Grip Level	medium
Surface	Indoor running track
Track Condition	
Temperature	

Electrics

E.S.C	Speed Passion
Servo	
Reciever	
Type of Cells	XVS SHO 4200
Motor	Speed Passion
Spur	83
Pinion	24
Internal Ratio	36t pulley

Wheels-Tyres-Inserts

Front Wheels	Schumacher
Front Inserts	Green
Front Tyres	Yellow Minipin
Rear Wheels	Schumacher
Rear Inserts	Green
Rear Tyres	Yellow Minipin

Transmission

Rear Diff Height	low
Front Diff Height	low
Front Layshaft Pulley	solid
Front Drive	Diff
Front Overdrive	no

Notes

Issue 2

Rear Suspension

Wheelbase	Short ☒	Medium ☐	Long ☐
Roll Bar	No ☐	1.2 ☐	1.4 ☐	1.6 ☐

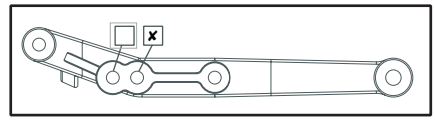

Equal Washers = 0° Toe-in
0.50 Difference = 0.65° Toe-in
1.00 Difference = 1.30° Toe-in
1.50 Difference = 1.95° Toe-in
2.00 Difference = 2.60° Toe-in
2.50 Difference = 3.25° Toe-in
3.00 Difference = 3.90° Toe-in

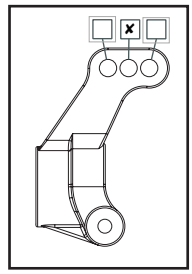

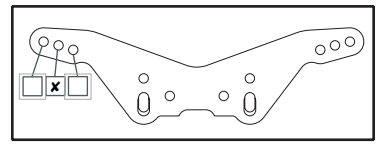

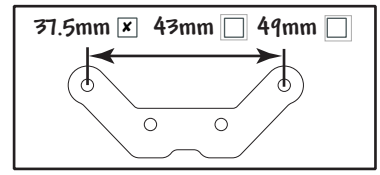

Toe-in / Rear Track Washers

Rear 3 mm	Front 0.5 mm	Actual 3.25°

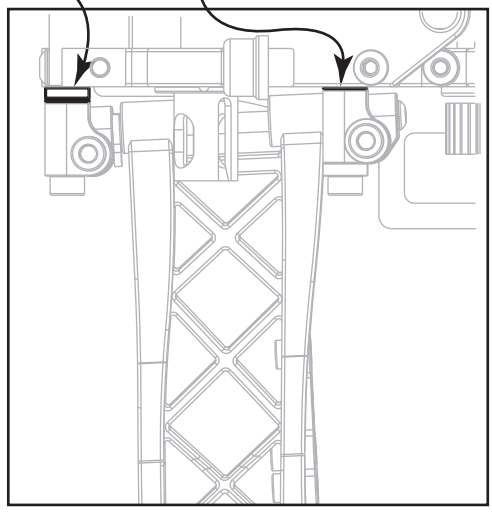

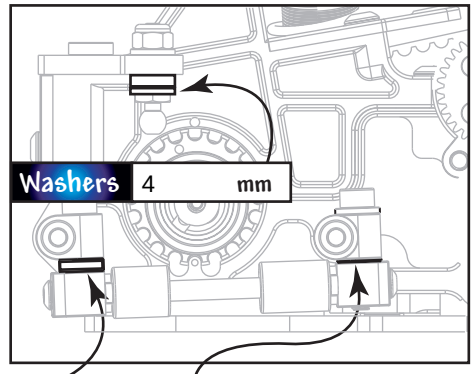

Rear 2 mm	Front 1 mm	Actual 1.3°

Anti-Squat Washers

Note: The Anti-Squat Angle is worked out using the Toe-In Chart Above, as the washers produce the same angles.

Front Suspension

Front Track Washers

Rear 1 mm	Front 1 mm

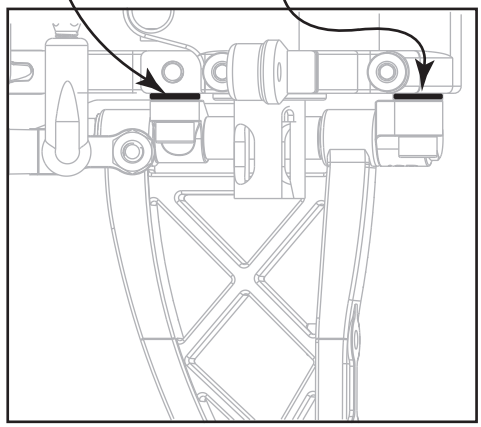

Roll Bar	No ☐	1.2 ☐	1.4 ☐	1.6 ☐

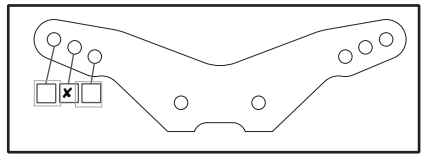

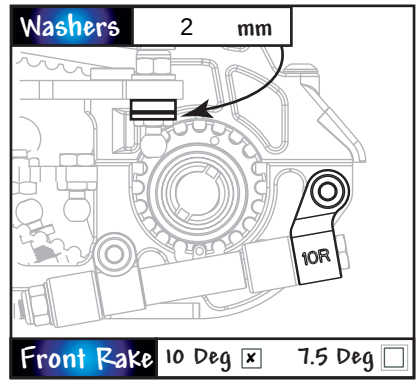

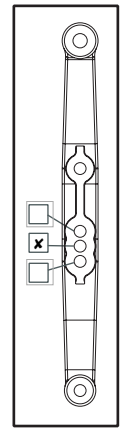

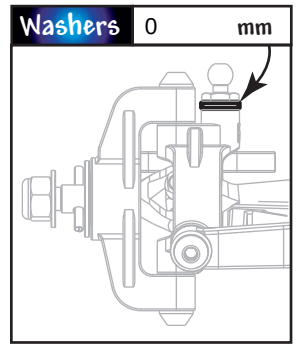

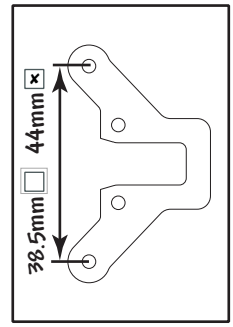

Rear Shocks

Oil	25	Piston	2 hole ☐ 3 hole ☒
Springs	Schumacher Red		
Diaphragm Spec	cut		

Shock Length mm

Front Shocks

Oil	25	Piston	2 hole ☐ 3 hole ☒
Springs	Schumacher Grey		
Diaphragm Spec	cut		

Shock Length mm