LAZER ZX5 Editable SETTING SHEET

Click-Edit-Print

KYOSHO — THE FINEST RADIO CONTROL MODELS

Name	Date	Track	Event
VINCENT HELIGOIN	10/11-02-06	PETIT RC RACE INDOOR	PETIT RC RACE 2006

Clear

Print

Front Suspension

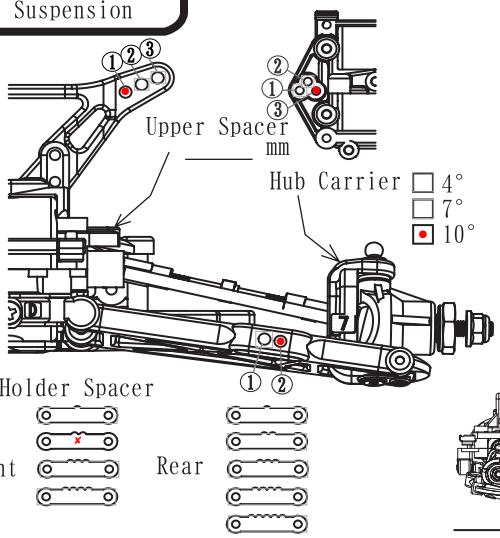

Upper Spacer ____ mm

Hub Carrier ☐ 4° ☐ 7° ☒ 10°

Sus. Holder Spacer

Front ____ Rear ____

Axle Hight Spacer ☒ Up ☐ Low

Bump Steer Spacer 0 mm

Knuckle ☒ Standard ☐ Opposite

Crank Spacer ____ mm

Ride Height ____ mm

Camber Angle BOX °

Toe Angle 5 °

Sway bar NICKEL 1.0

Front Diff. ☐ Rigid ☐ Oneway ☒ Diff.

Shock Piston 3A

Shock Oil # KYOSHO 400

Shock Spring KYOSHO 65

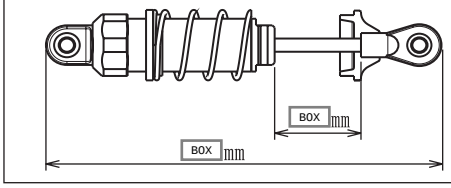

Rear Suspension

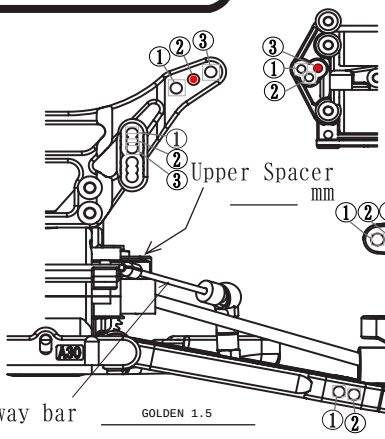

Upper Spacer ____ mm

Hub Carrier Spacer 2 mm

Hub Carrier ☐ 0° ☒ 2°

Hub Carrier Height ☐ Up ☒ Middle ☐ Down

Sway bar GOLDEN 1.5

Camber Angle ____ °

Sus. Holder Front ☐ BF ☐ BR Rear ☐ A15 ☐ A25 ☒ A30

Sus. Holder Spacer Front ____ Rear ____

Ride Height ____ mm

Shock Piston 2C

Shock Oil # KYOSHO 400

Shock Spring KYOSHO 75

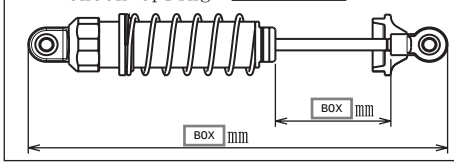

Tire

		Compound
Front Tire	SCHUM MINI PIN	YELLOW
Rear Tire	SCHUM MINI PIN	YELLOW
Front Inserts	SCHUM	
Rear Inserts	SHUM	

Other

Motor ORION V2 10*1

Pinion/Spur 18 / 78

Wing STANDARD

Wing Angle ☒ 0° ☐ 7° ☐ 4°

Center Shaft ☒ Oneway ☐ Direct

Slipper Sheet ☐ Red-White ☐ Red-Red ☐ White-White

Track Condition

☐ Smooth ☐ Bumpy ☐ Low Traction ☐ Med. Traction ☒ Higt Traction

☐ Dry ☐ Wet ☐ Dusty ☒ Indoor ☐ Outdoor

Spring Rate

#50	Black	#68	Blue
#55	Orange	#70	Silver
#60	Orange Yellow	#75	Light Green
#65	Yellow	#80	Green

Gear Ratio

Secondary Gear Ratio 2.5 (16:40)

	16	17	18	19	20	21	22	23	24	25
76		11.18	10.56	10.00	9.50	9.05	8.64	8.26	7.92	7.60
78	12.19	11.47	10.83	10.26	9.75	9.29	8.86	8.48	8.13	7.80

Shock Piston

Soft ⟷ Hard

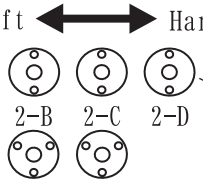

Own composition (2-1.3)

Sway Bar

1.0	Nickel
1.1	Gold
1.2	Silver
1.3	Copper
1.4	Black
1.5	Golden
1.6	Chromium

Comments

OPTIONAL PARTS:
- LAW31, - LAW30, - SP107H
MOTOR/BATTERY/CHARGER
- ORION V2 PAVIDIS EDT,
- ORION GP3700/GP4200 5AMP CHARGE