**J-CONCEPTS BJ4 SET-UP SHEET:**

**DRIVER:** Jason Ruona

**DATE:** 9-18-04

**TRACK/CITY:** Daytona / Ocala

**EVENT:** Florida State Series Tracks

NOTES:

**Sway Bar kit installed. All washers are .030" unless otherwise specified. Heavy Duty front arms. Holes reamed in the scoops of the body for extra cooling flow to motor. Ride height arms level all the way around. Tip: Lower ride height when track has extra grip.**

1. **For extra traction try using Racers Edge .5 or 1 degree hub carriers.**
2. **Weight was added to the right side of the chassis near the motor for better balance.**

**CONDITIONS:**

SMOOTH: X
BUMPY: X
LOW TRACTION:
MED TRACTION: X
HIGH TRACTION:
WET:
DRY:
SANDY: X
SOFT DIRT:
GRASS:
BLUE GROOVE: X
CLAY:
DUSTY: X
OTHER:

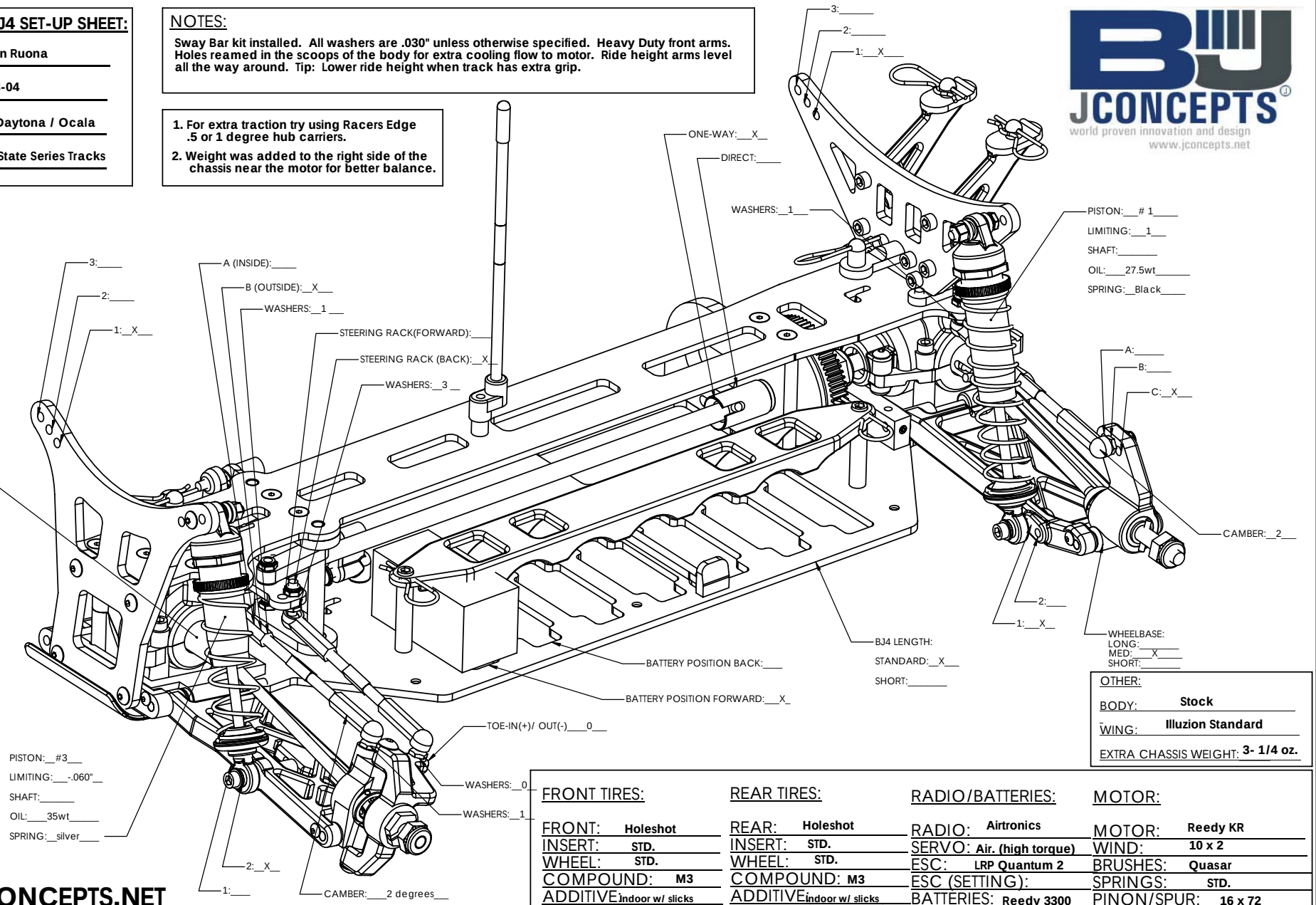


OTHER:

BODY: **Stock**

WING: **Illuzion Standard**

EXTRA CHASSIS WEIGHT: **3- 1/4 oz.**

| FRONT TIRES: | | REAR TIRES: | | RADIO/BATTERIES: | | MOTOR: | |
|---|---|---|---|---|---|---|---|
| FRONT: | **Holeshot** | REAR: | **Holeshot** | RADIO: | **Airtronics** | MOTOR: | **Reedy KR** |
| INSERT: | **STD.** | INSERT: | **STD.** | SERVO: | **Air. (high torque)** | WIND: | **10 x 2** |
| WHEEL: | **STD.** | WHEEL: | **STD.** | ESC: | **LRP Quantum 2** | BRUSHES: | **Quasar** |
| COMPOUND: | **M3** | COMPOUND: | **M3** | ESC (SETTING): | | SPRINGS: | **STD.** |
| ADDITIVE: | **indoor w/ slicks diesel or forward traction** | ADDITIVE: | **indoor w/ slicks diesel or forward traction** | BATTERIES: | **Reedy 3300** | PINON/SPUR: | **16 x 72** |

**WWW.JCONCEPTS.NET**