HB RACING WORLD CHAMPIONS D817 SETUP SHEET

Driver Mark Redmond **Date** 30.04.17 **Track** PDMCC Pendle **Event** Club

Track Condition Dry Astro, bumpy, Med-high grip

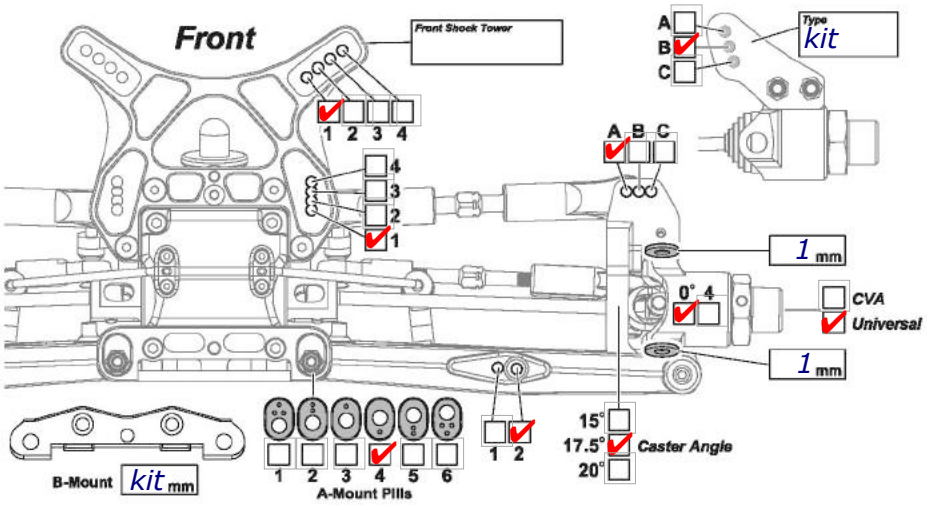

Ride Height 21 mm

Camber Angle 3 °

Toe Angle 0 °

Sway Bar 2.6 mm

Shock Length 100 mm

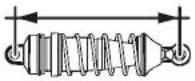

Front Shocks

Oil weight 500cst wt

Piston 2x1.3 4x1.4 mm

Bladder yes

Spring gold

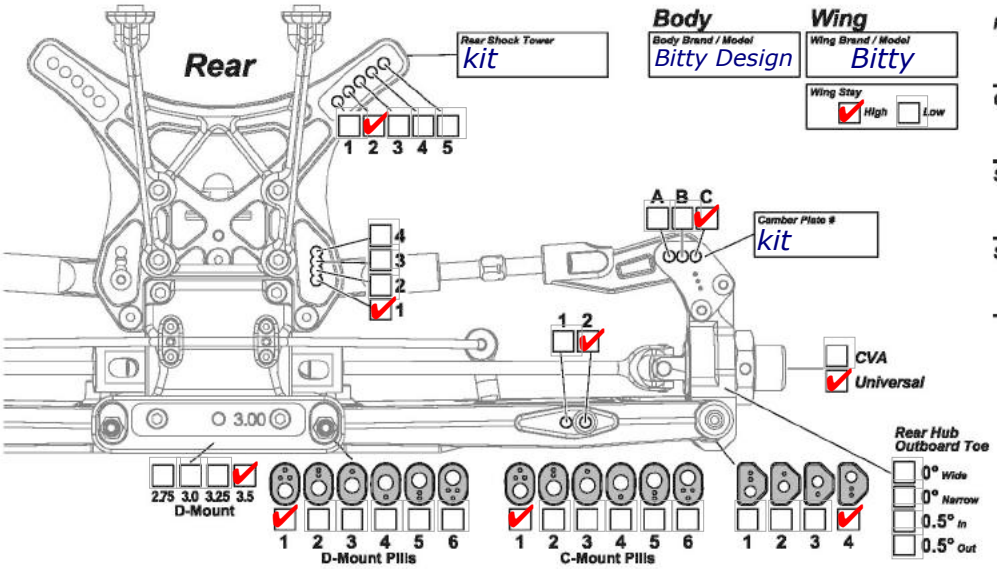

Ride Height 22 mm

Camber Angle 5 °

Sway Bar 2.6 mm

Shock Length 118 mm

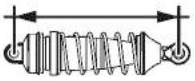

Rear Shocks

Oil weight 350cst wt

Piston 6x1.4 mm

Bladder yes

Spring White

Alterations by Arn0 at PetitRC.com

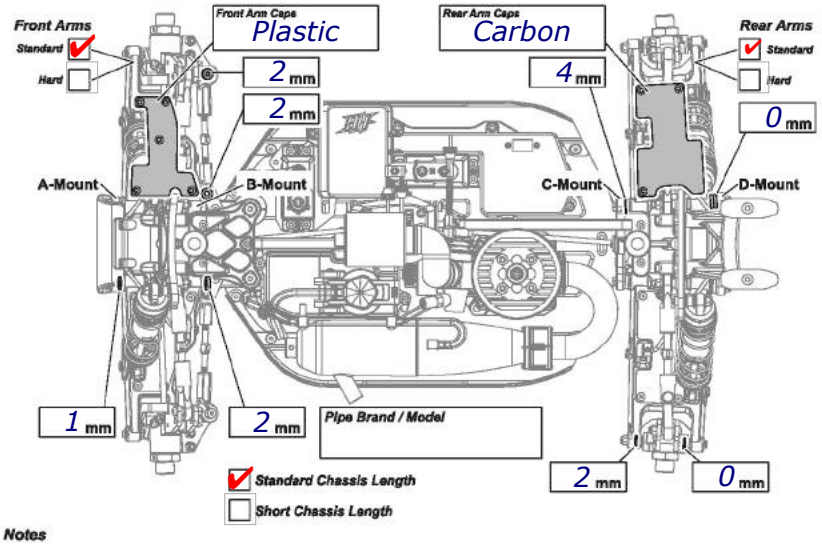

Notes

Engine

Brand Nova Rossi Mito 7

Spur gear kit **Clutch Bell** kit

Clutch Shoes kit

Clutch Springs kit

Glow Plug No5 Special

Glow Fuel Racing Experience 25% Hot Fire

Tires

	Front	Rear
Brand	VR Small Pin	VR Small Pin
Compound		
Insert	Medium Molded	Medium Molded
Wheel	Tpro	Tpro
Notes	4 outer & 2 Inner Rows cut off	Outer Row of pins cut off

Diff Oils

	Front	Center	Rear
Brand			
Oil Weight / Grade	20k	5k	7k