HB RACING WORLD CHAMPIONS D418 SETUP SHEET

Driver Lee Chorley **Date** 15/7/18 **Track** South Lakes **Event** Cars and Stars

Track Condition Grass / Hard packed / Loose **Temperature** 25deg c

FRONT

FRONT KICK-UP

Front/Front	Front/Rear	Kick-up	
∘	∘	10°	
∘∘	∘	9°	
∘∘∘	∘	8°	
∘	∘∘	11°	
∘∘	∘∘	10°	✓
∘∘∘	∘∘	9°	
∘	∘∘∘	12°	
∘∘	∘∘∘	11°	
∘∘∘	∘∘∘	10°	

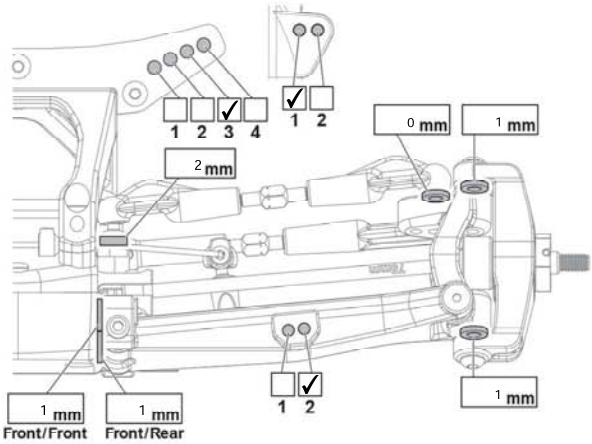

FRONT SHOCKS

Oil wt.	600cst
Piston	1.6
Bladder	yes
Spring	kit (60)
Notes	full pack

Ride Height	18 mm
Droop	mm
Camber Angle	-1 ∘
Toe Angle	+1 ∘
Sway Bar	1.2 mm
Shock Length	75 mm

REAR

REAR ANTI-SQUAT

Rear/Front	Rear/Rear	Anti-squat	
∘	∘	0°	
∘	∘∘	1°	
∘	∘∘∘	2°	
∘∘	∘∘	0°	✓
∘∘	∘∘∘	1°	
∘∘∘	∘∘∘	0°	
∘∘∘	∘∘	-1°	

No Rear sway bar

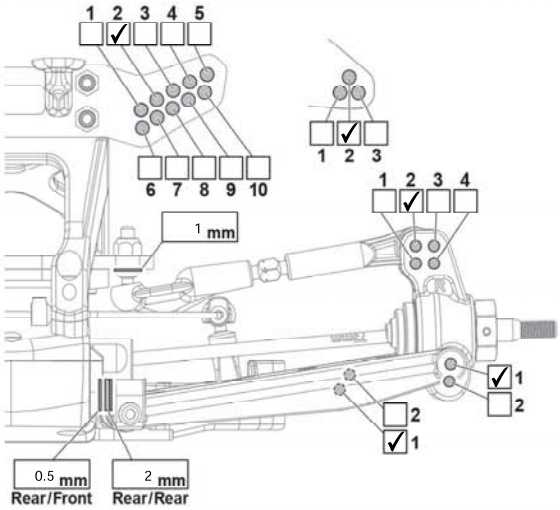

REAR SHOCKS

Oil wt.	500
Piston	1.7
Bladder	yes
Spring	kit (35)
Notes	Full pack

Ride Height	18 mm
Droop	mm
Camber Angle	-2 ∘
Toe Angle	3.5 ∘
Sway Bar	mm
Shock Length	92 mm

TIRES

	Front	Rear
Tire	BB white	BB white
Insert	4wd tubby	med

Battery	
Motor	6.5
Gearing	72 / 24
Body / Wing	kit / kit

DIFF OIL

	Front	Center	Rear
Brand	xtr	core	xtr
Oil wt.	15000	300000	10000

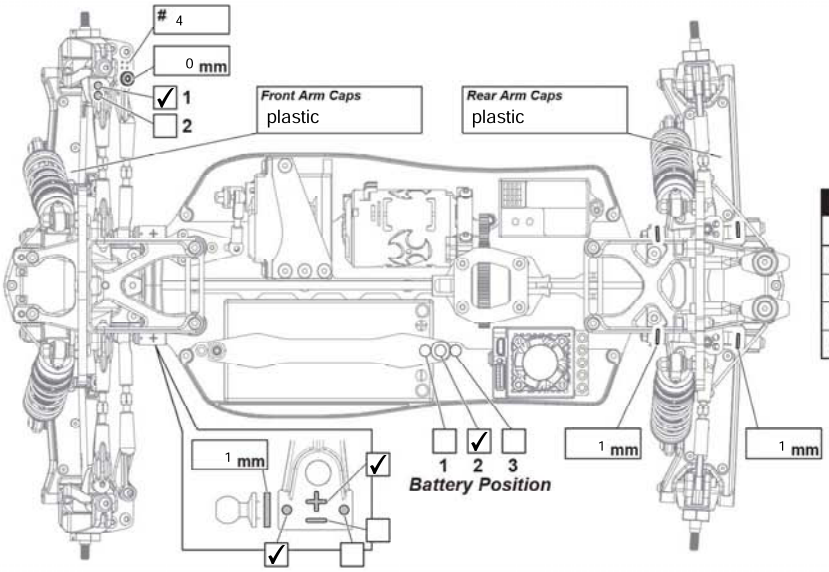

REAR TOE-IN

R/F	R/R	Toe-in	
0.5mm	0.5mm	2.0°	
0.5mm	1.0mm	2.5°	
0.5mm	1.5mm	3.0°	
0.5mm	2.0mm	3.5°	✓

Notes:

$$\text{Gear Ratio} = \frac{\text{Spur Gear}}{\text{Pinion Gear}} \times 3.3077$$