D216 SETUP SHEET

HB RACING WORLD CHAMPIONS — DAVID RONNEFALK

Driver David Ronnefalk **Date** 28-29/2 - 2017 **Track** Lyon **Event** Lyon GP 2017

Track Condition
Composition: ☐ Astroturf ☐ Clay ☑ Carpet ☐ Dirt ☐ Grass ☐ Wood ☐ Other:
Traction: ☐ Low ☐ Medium ☑ High ☑ Dry
Surface: ☐ Bumpy ☑ Smooth ☐ Wet

Front

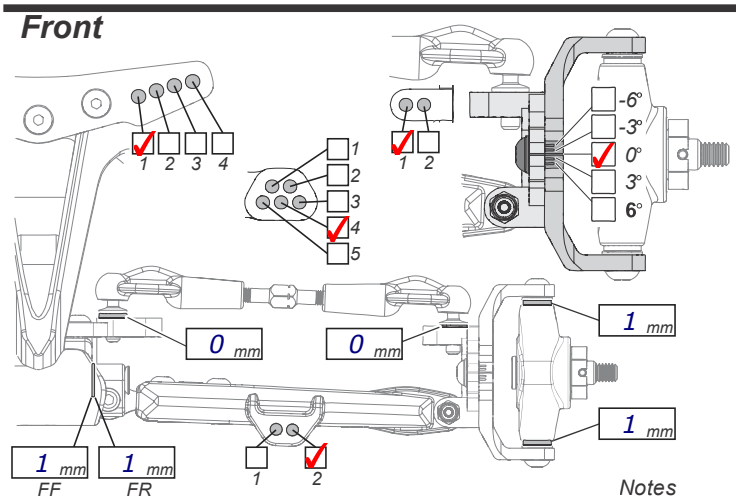

Ride Height: 15 mm
Camber Angle: 1 °
Toe Angle: +0.5 °

Front ☑ Center ☐ Back ☐

Front Kick-Up

F/F	F/R	Kick-Up	
•	•	22.5°	
••	•	21.2°	
•••	•	20.0°	
•	••	23.8°	
••	••	22.5°	
•••	••	21.2°	
•	•••	25.0°	✓
••	•••	23.8°	
•••	•••	22.5°	

Front Shocks

Oil Weight: XTR 50 wt
Piston: 2x1.6 Tapered
Spring: Gold
*Shock Length: 22.5 mm
Notes: 2mm limiter inside, 2 o-rings on the outisde

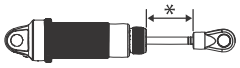

Notes

Rear

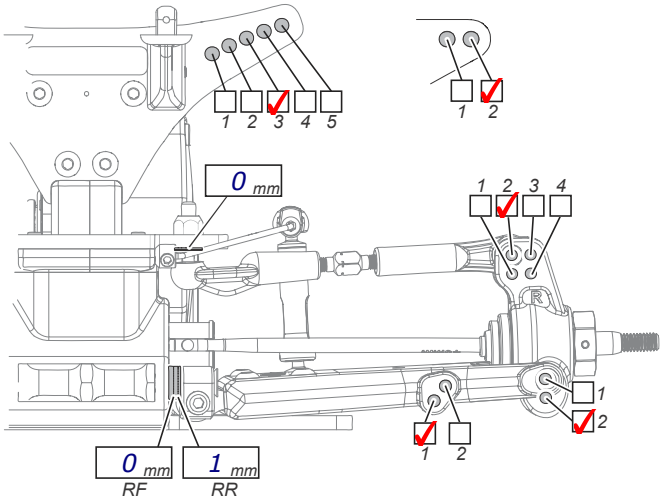

Ride Height: 15 mm
Camber Angle: 2 °
Toe Angle: 1.5 °
Sway Bar: None

Rear Anti-Squat

R/F	R/R	Anti-Squat	
•	•	1.5°	
••	•	0.5°	
•••	•	-0.5°	
•	••	3.0°	
••	••	1.5°	
•••	••	0.5°	✓
•	•••	4.0°	
••	•••	3.0°	
•••	•••	1.5°	

Rear Shocks

Oil Weight: XTR 40 wt
Piston: 2x1.7 Tapered
Spring: Gold
*Shock Length: mm
Notes: No limiters

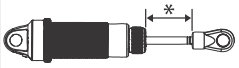

Notes

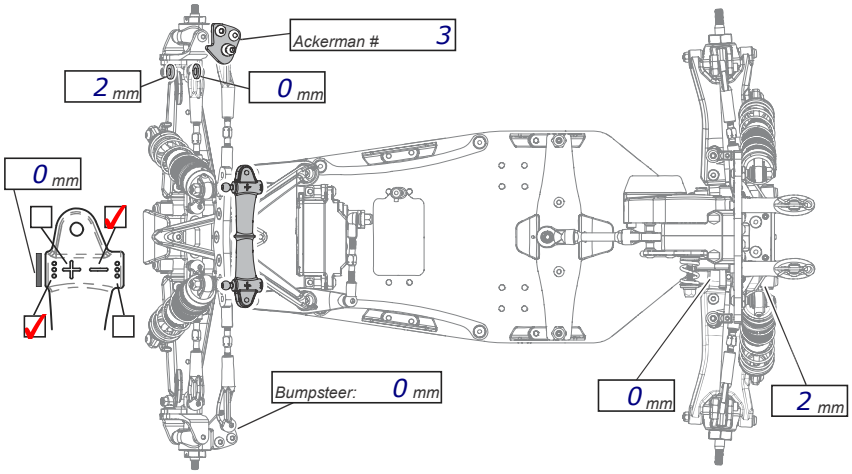

Rear Toe-in

R/F	R/R	Toe-in	
0.5mm	1.5mm	1.5°	
0.5mm	2.0mm	2.0°	
0.5mm	2.5mm	2.5°	
0.5mm	3.0mm	3.0°	

Differential
Gear ☑ Oil Wt. 20k
Ball ☐

Servo
Front ☑ Rear ☐

Wing Height
Low ☐ Mid ☐ High ☑

Tires	Front	Rear
Tire	Cut Stagger	Balistic MiniPin
Insert	None	Medium Blue
Notes		

Battery: Orion 4500mah
Motor: Orion 6.5T
Pinion: 21 Spur: STD
Body/Wing: JConcepts F2 / JConcepts

Battery Position
☐ Inline ☑ Sideways

Notes