RC10 B5M TEAM KIT

Setup Sheet

Driver: J.Parnot
Track: TEB Gargenville
Date: 12/2015
Event: Téléthon

Front Suspension:

Editable by Arn0 at PetitRC.com

Camber: 2 °
Total Toe: 0 °
Ride Height: 17
Arm Type: Hard
Tower Type: B5R Hard
Caster Block Insert: 5 °
Kick-Up Angle: 25 °
Wheel Hex: Stock

Notes:
Alloy bulkhead
Alloy steering bellcrank brace
Alloy rear ball stud mount
Alloy C & D Brace
+4 C Brace
B5Lite Chassis
Titanium turnbuckles
Team Associated Oils

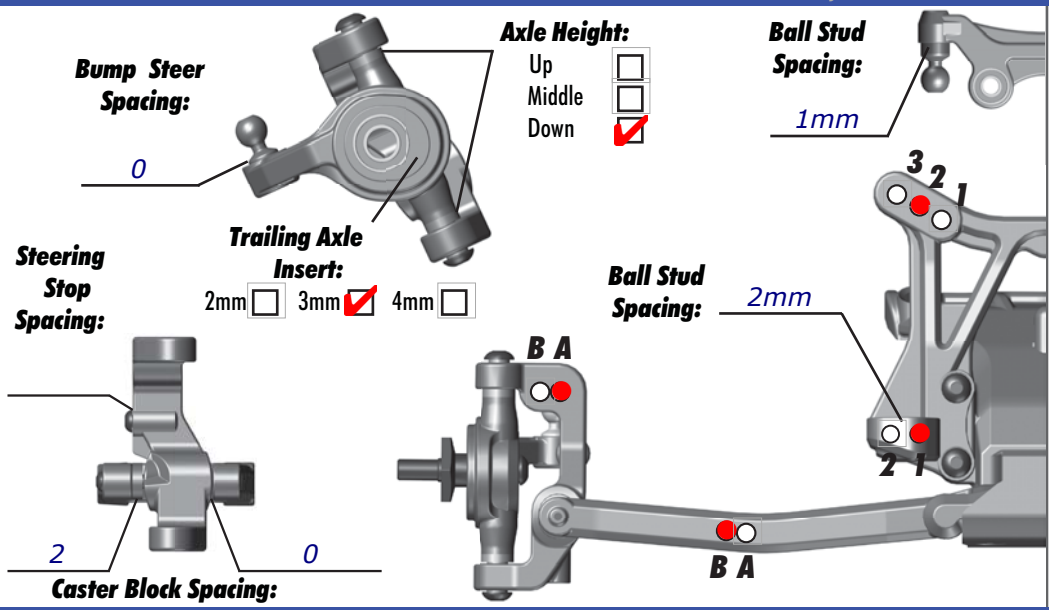

Rear Suspension:

Camber: 2 °
Ride Height: 18
Wheel Hex: 7mm
Hub Spacing:
Forward ☐ Middle ☑ Back ☐

Notes:
Arm type: Hard

Anti Roll Bar:
None ☑
Black (1.2mm) ☐
Silver (1.3mm) ☐
Gold (1.4mm) ☐

Rear Hub Link Setting:
A C A
B B A
Up ☑
Down ☐

Ball Stud Spacing: D B C A

Arm Mount:

Inboard Toe: 2.5 °
Anti-Squat: 3 °
Insert (D): Ext

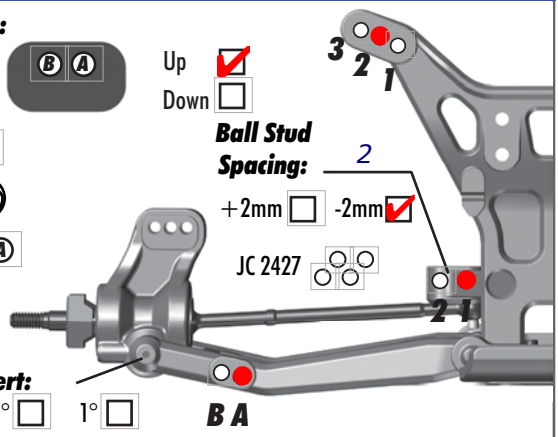

Electronics:

Radio: Futaba **Servo:** Savöx
EPA: Throttle: 100 % **Brake:** 89 %
ESC: Reedy Blackbox
ESC Settings:
Motor: Reedy Mach3 6.5
Wind: **Timing:**
Pinion: 22 **Spur:** 81
Battery: Reedy Shorty 5300
Battery Position: Front (front small battery spacer)

Drivetrain:

Differential:
Ball ☐
Gear ☑

Gearbox:
3 Gears ☑
4 Gears ☐

Notes: 5000

Slipper Clutch:

Type: VTS
# of Pads: 3
Notes:

Shocks:

	Front	Rear
Piston:	2x1.6	2x1.7
Oil:	30	25
Spring:	Yellow	Blue
Limiters:	1.5mm	
Cup Offset:	+5	+5
Stroke:	20	27
Free Length:		
Notes:		

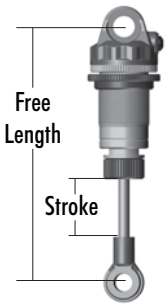

Track Info:

Size:	Small ☑	Medium ☐	Large ☐	Extra Large ☐
Surfaces:	Dirt ☐	Carpet ☑	Astroturf ☐	Multi Surface ☐
Traction:	Low ☐	Medium ☑	High ☐	Very High ☐
Moisture:	Dry ☑	Damp ☐	Wet ☐	
Condition:	Indoor ☑	Outdoor ☐	Dusty ☐	Hard Packed ☐
	Bumpy ☐	Grooved ☐	Smooth ☐	Loamy ☐

Temperature: Ambient: Track:
Notes:

Tires:

Stagger **:F - Tires - R:** Minipin
Yellow **:F - Compound - R:** Yellow
:F - Insert - R: Medium
:F - Wheel - R:
:F - Notes - R: 1 round cut outside/inside

Body & Wing:

Body: Proline Phatom
Wing:
Wing Angle: 0° ☐ 3° ☑ 6° ☐
Notes: Front small wing

Race Results:

Qualify: 4 **Main:** A
Finish: 2th **TQ:** ☐
Best Lap Time:

Vehicle Comments:

Total Vehicle Weight: 1580 gr