SETUP SHEET for the Team Associated RC10B4

Driver: STANDARD #9034 B4 SETUP
Track / City:
Event: Date: MARCH 2003

FRONT

SHOCK MOUNTING & CAMBER LINK

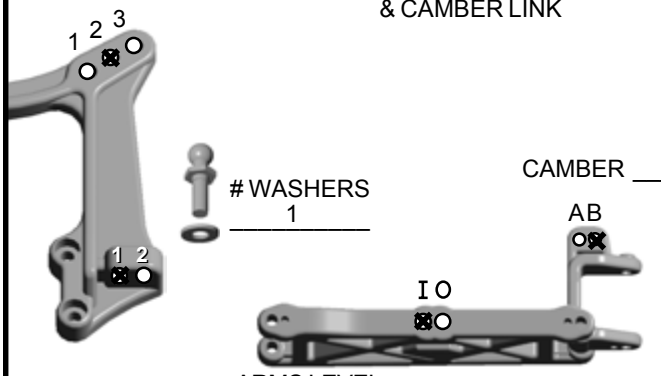

WASHERS: 1

CAMBER: -1 °

RIDE HEIGHT: ARMS LEVEL

TOE-IN (+) / OUT (-): 0 °

BUMP STEER SPACER: .030

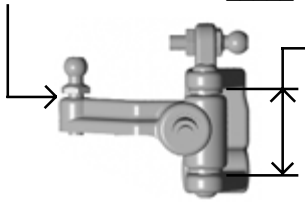

AXLE HEIGHT
- ☐ up
- ☒ middle
- ☐ down

CASTER
- ☐ 20°
- ☒ 25°
- ☐ 30°

STEERING BLOCK: ☒ trailing ☐ inline

REAR

SHOCK MOUNTING & CAMBER LINK

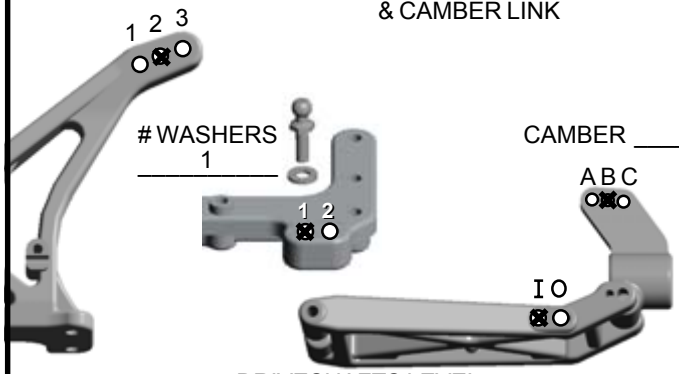

WASHERS: 1

CAMBER: -1 °

RIDE HEIGHT: DRIVESHAFTS LEVEL

ANTI-SQUAT
- ☐ 0°
- ☐ 1°
- ☐ 2°
- ☒ 3°

WHEELBASE
- ☐ long
- ☐ medium
- ☒ short

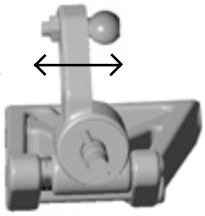

ANTI-ROLL BAR
- ☒ none
- ☐ black (soft)
- ☐ sivler (med)
- ☐ gold (heavy)

FRONT SHOCKS

OIL: 30 wt

SPRING (color): GREEN

PISTON #: 2

SHAFT: ☒ unobtainium ☐ STD

LIMITERS: .090

REAR SHOCKS

OIL: 30 wt

SPRING (color): SILVER

PISTON #: 1

SHAFT: ☒ unobtainium ☐ STD

LIMITERS: 1/32"

FRONT TIRES & WHEELS

FRONT TIRES: #9591

INSERTS: #9591

WHEELS: #9588

REAR TIRES & WHEELS

REAR TIRES: #9589

INSERTS: #9590

WHEELS: #9590

TRACTION COMPOUND: NONE

RADIO/BATTERIES

RADIO:

SERVO:

ESC:

DRAG BRAKE:

INIT BRAKE:

BATTERY PLACEMENT: ☐ front ☐ rear

BATTERIES:

MOTOR

MOTOR & WIND:

BRUSHES:

SPRING:

PINION / SPUR: /

OTHER

BODY: B4 INTERCEPTOR

WING: B4 INTERCEPTOR

WING ANGLE: ☐ 0° ☐ 3° ☒ 6°

CHASSIS: 9560 COMPOSITE

CONDITIONS

- ☐ smooth
- ☐ bumpy
- ☐ low traction
- ☐ med traction
- ☐ high traction
- ☐ sandy
- ☐ soft dirt
- ☐ grass
- ☐ blue groove
- ☐ clay
- ☐ wet
- ☐ dry
- ☐ dusty
- ☐ other

COMMENTS

NOTES:

FOR MORE SETUPS, VISIT www.RC10.com and click on "SETUP SHEETS"