B4.1 Factory Team

Setup Sheet for Team Associated's B4.1

:: Driver: Kurt "Coach" Wenger **:: Date:** 05/02/12
:: Track: West Coast RC
:: Event: Club Race

Rev. 2

:: Front End

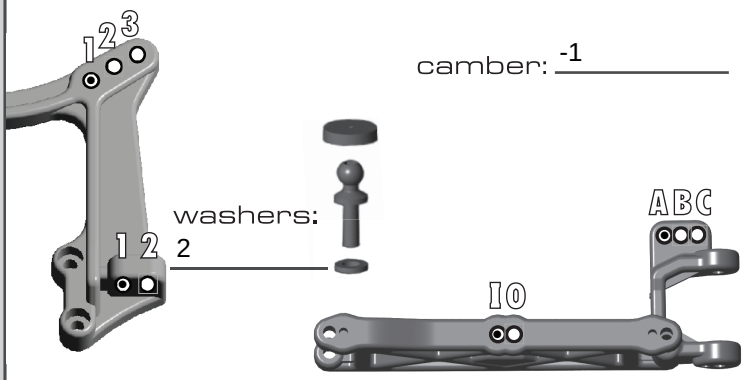

camber: -1
washers: 2
toe: 0
ride height: 24.5mm

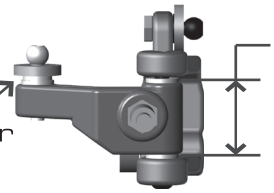

bump steer spacer: 2 mm

axle height		caster	
up	☐	20°	☐
middle	☒	25°	☐
down	☐	30°	☒

:: Rear End

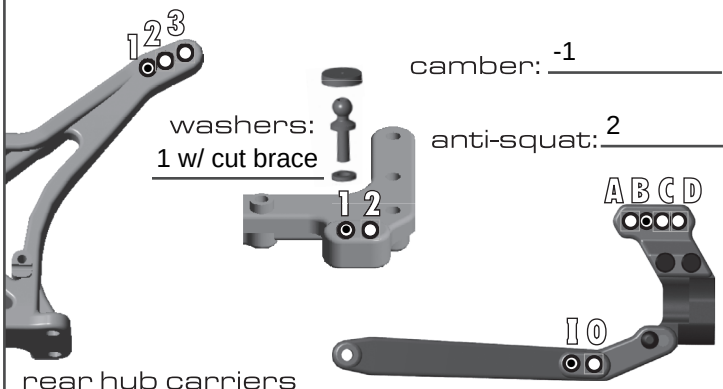

camber: -1
washers: 1 w/ cut brace
anti-squat: 2

rear hub carriers

std	☐
0 °	☒
0.5 °	☐
1 °	☐
1.5 °	☐

ride height: 24 mm

wheel base

long	☐
medium	☒
short	☐

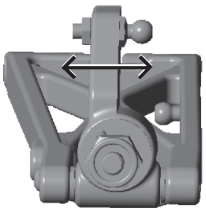

anti-roll bar

none	☒
black (soft)	☐
silver (med)	☐
gold (hard)	☐

:: Front Shocks

spring: AVID Red
piston: #2
shock oil: 32.5 wt
limiter: 4 thin =.120

:: Rear Shocks

spring: AVID Red
piston: AE blank, 3 hole 56 drill
shock oil: 32.5wt
limiter: 2 thin

:: Electronics

motor & wind: 7.5 Reedy Sonic, 1 notch timing
pinion: 21
spur gear: 81
batteries: Wolfpack #736
battery placement: 1 thick pad in front, 1/2 pad in rear

radio: M11x
throttle / brake epa: 100/65
throttle / brake expo : 0/-10
esc: sxx 2.0 with 3.0 software (0-0-2-4)
throttle profile: 0
initial brake:
drag brake: 4
servo: XP1015
steering expo: 0

:: Other

body: JConcepts Finnisher
wing: JC
notes:

:: Differential

gear differential ☐
ball differential ☒
fluid:

:: Front Tires

tire: scrubs or barcodes
compound: MC or Gold
insert: closed cell
wheel: AVID

:: Rear Tires

tire: suburbs
compound: MC
insert: closed cell
wheel: AVID

:: Race and Vehicle Comments

qualify: 2 main: A finish: 3 tq: ☐

comments: MIP CVDs, no rear ballast, only 1/2 oz. by Rx and 1/4 oz in RR triangle.
Shaved rear u-brace, 1 washer, AVID hub towers in lower "C" tower middle position

:: Track Info

smooth: ☒ bumpy: ☐ blue groove: ☐
traction: high: ☐ med: ☒ low: ☐
soft dirt: ☐ grass: ☐ clay: ☒ wet: ☐
dusty: ☐ other:

:: For more setups, visit www.RC10.com and click on 'Setup Sheets'