SET-UP SHEET

XRAY T4'15

RACE	European Championship winning set-up
TRACK	Mini-Autodromo de Torres Novas
NAME	Alexander Hagberg
CITY / COUNTRY	Torres Novas — Portugal
CONTACT	alexander.hagberg@gmail.com

DATE	TEMPERATURE / °F or °C	AIR	TRACK
30/08/2015			

QUALIFYING POSITION	BEST LAPTIME /sec	FINAL POSITION	RACE LENGTH /minutes
2	14.6	1	5

TRACK CONDITION			
	☐ TECHNICAL	☒ MIXED	☐ FAST
		☐ CARPET	☒ ASPHALT
TRACTION	☐ LOW	☒ MEDIUM	☐ HIGH

FRONT	REAR
TRANSMISSION	
SOLID AXLE ☒ YES	BALL DIFFERENTIAL ☐ YES
SOLID ONE WAY DIFFERENTIAL ☐ YES	
ONE WAY DIFFERENTIAL ☐ YES	
GEAR DIFFERENTIAL ☐ YES	GEAR DIFFERENTIAL ☒ YES
OIL /Cst	OIL 5000 /Cst

PINION / T	27	SPUR GEAR / T	110
FINAL DRIVE RATIO	7.7407	ROLLOUT	

FRONT		REAR
PSS	SHOCK TYPE	PSS
2.7	XRAY SPRINGS	2.7
550	OIL /Cst	550
25	REBOUND %	25
☒ YES ☐ NO	FOAM INSERTS	☒ YES ☐ NO
☐ YES ☒ NO	O-RING ON SHAFT	☐ YES ☒ NO

	PISTONS	
☐ 3 HOLES	1.0mm	☐ 3 HOLES
☐ 4 HOLES	1.1mm	☐ 4 HOLES
	1.2mm	
	OTHERS	

	ANTI-ROLL BAR	
1.3 THICKNESS/mm		THICKNESS/mm 1.2

LRP G36	TIRES	
	INSERTS	
Tire Tweak	ADDITIVE	
	ADDITIVE TIMING	

FRONT LEFT | FRONT RIGHT | TREATED AREA | REAR LEFT | REAR RIGHT

ECCENTRIC BUSHINGS — ROLL CENTER — ECCENTRIC BUSHINGS

FF (FF): 1 ☒ / 0.5 ☐ — 1 ☐ / 0.5 ☒ — RR (RR)

FR (FR): 1 ☐ / 0.5 ☒ — 1 ☐ / 0.5 ☒ — RF

MOTOR	ORCA RX3 4.5T	TIMING	0
ESC	ORCA VX3	BATTERIES	ORCA 6200 HV
BODY	PF LTC-R LW	WING	PF Hard STD
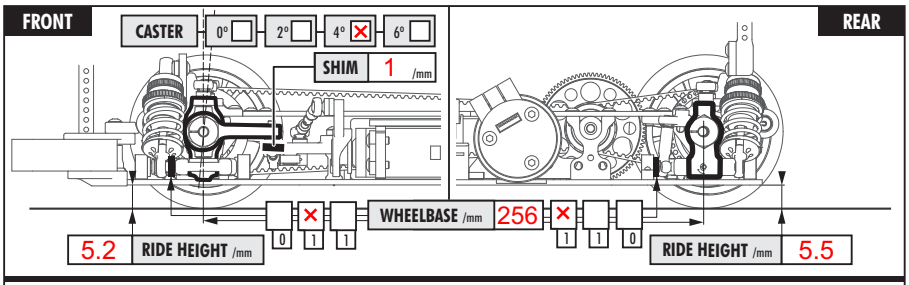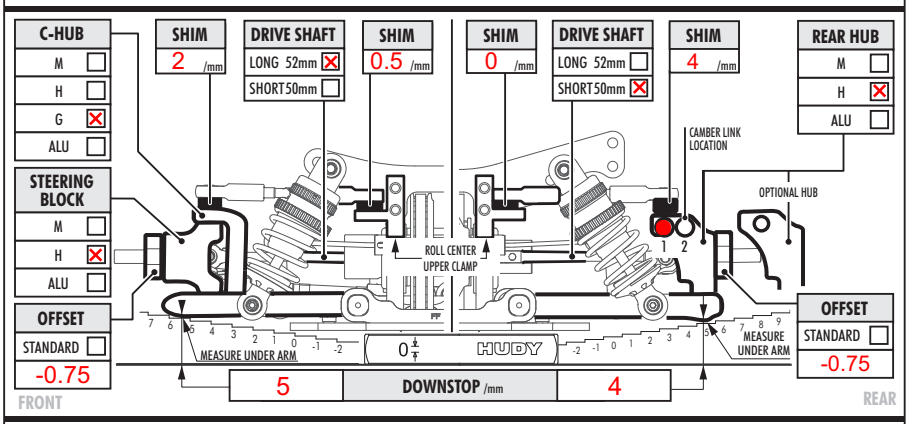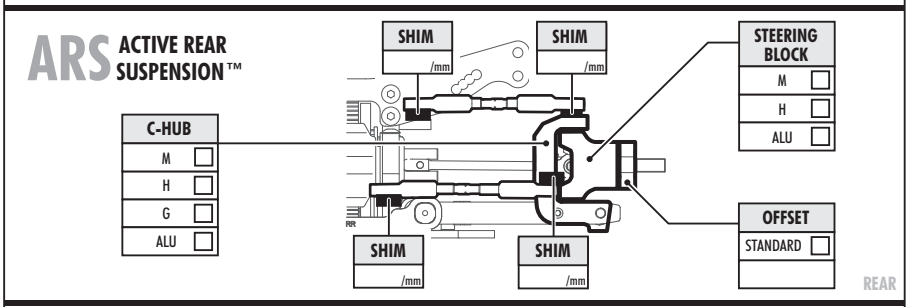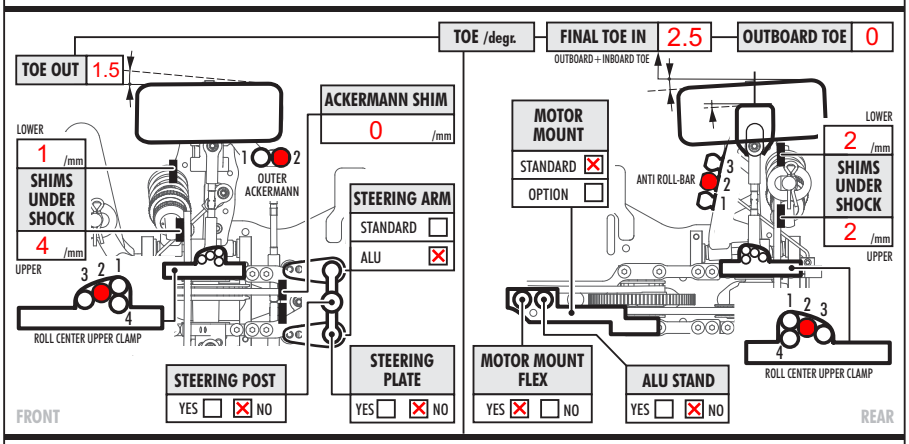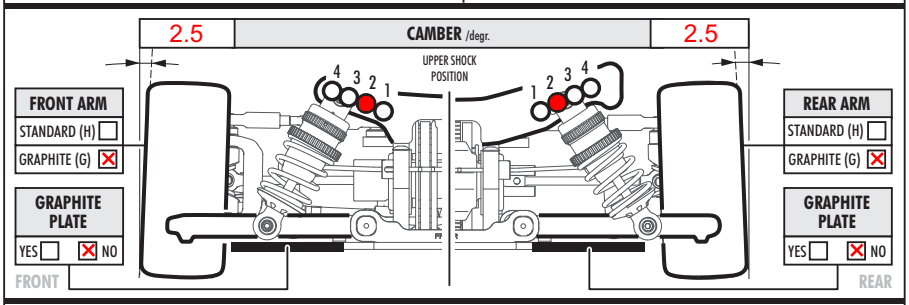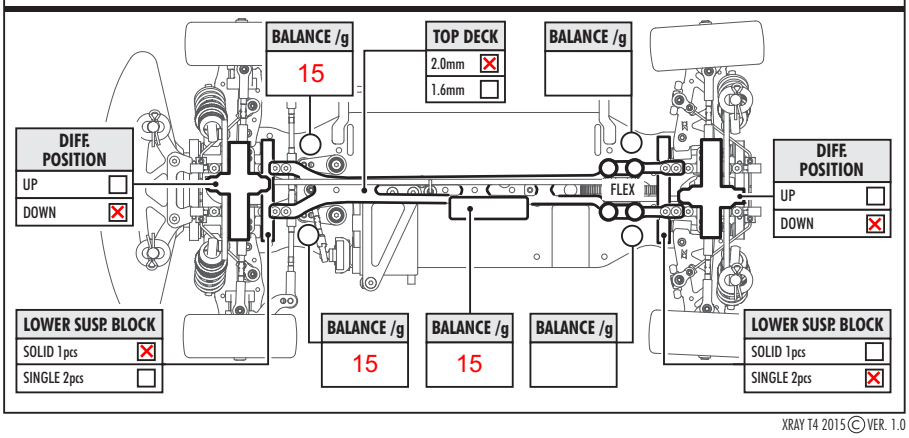
COMMENTS
Hudy alu servo horn 293501
Topdeck raised 1mm