XPRESS EXECUTE XQ1 SET-UP SHEET

Driver	CYLeung	Track Surface	Outdoor / Asphalt			Track Temperture	
Date	1/12/2018	Track Traction	Medium	Result	A5	Air Temperture	
Track	TRC	Country	Hong Kong	Best Lap	15.3	Humidity	
Remark	Oneten RD3 & RD4						

Front / Rear

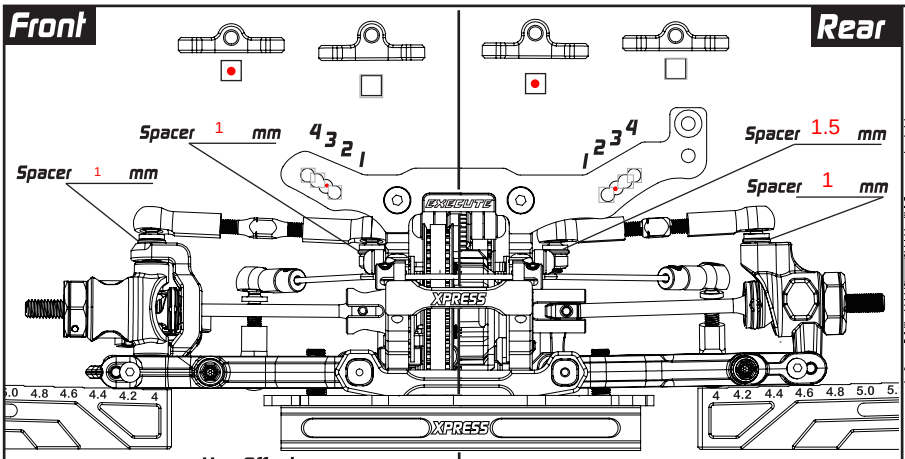

	Front	Rear
C-Hub	☐ M ☒ H	
Steering Block	☐ M ☒ H	
Suspension Arm	☐ M ☒ H	
Hex Offset	4.5 mm	4.5 mm
Camber	2 °	2 °
Ride Height	5 mm	5.2 mm
DownStop	5.7 mm	4.6 mm
Sway Bar	1.3 mm	1.2 mm
Rear Hub		☐ M ☒ H
Suspension Arm		☐ M ☒ H

Optional — On-Power Control System

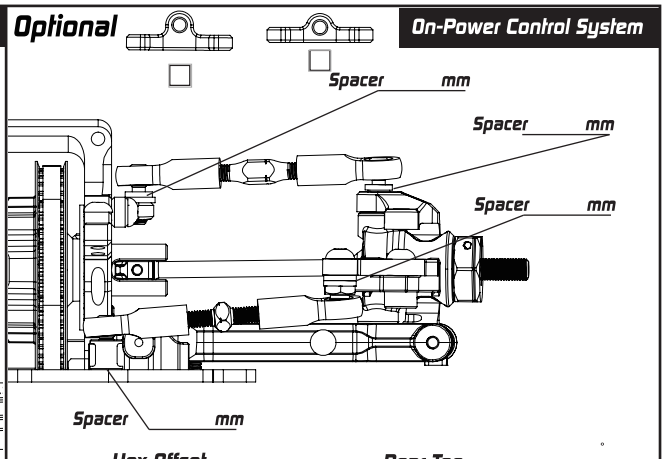

Hex Offset	mm	Rear Toe	°
Camber	°		
Ride Height	mm	Steering Block	☐ M ☐ H
DownStop	mm	Suspension Arm	☐ M ☐ H
Sway Bar	1.2 mm		

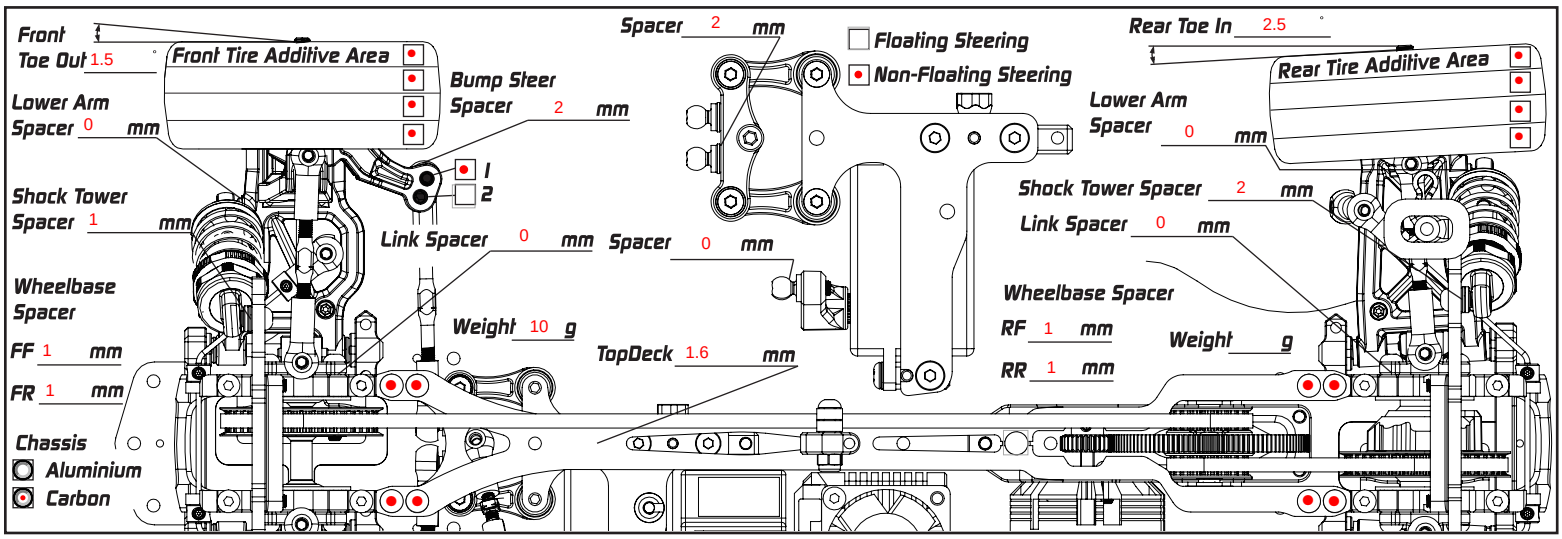

Suspension Mount Setup

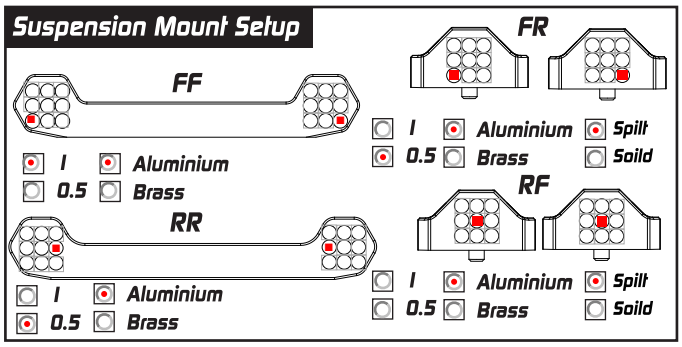

Center Line Flex Control

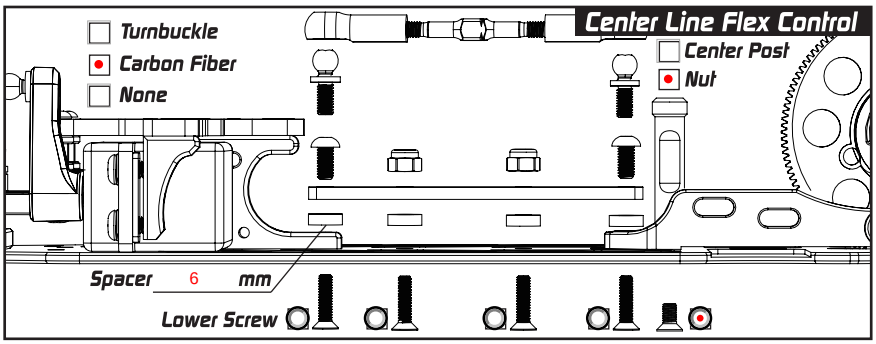

Damper Setup

	Front	Rear
Spring	SMJ red 2.5-2.8	SMJ sliver 3.0
Oil	400cst Hudy	400cst Hudy
Rebound	20%	20%
Piston	4	4
Length	STD	STD
Foam Insert	☐	☐
Hole In Cap	☐	☐

Transmission Setup

	Front	Rear
	Spool	Gear Diff
Oil		3000cst
Weight	g	1.3 g
Position	High	High

Others

Servo	Sanwa	Tires	handout
Esc	Dash	Additive	handout
Motor	handout	Body	PF type-S
Spur	64 P/ 102 T	Rear Wing	Lee speed
Pinon	64 P/ 43 T	FDR	4.506