WILDFIRE 0.03

1/10 4WD ELECTRIC COMPETITION TOURING CAR KIT

ArnO / PetitRC

SETUP SHEET

DRIVER Lucas Urbain | DATE 26.02.17 | EVENT ETS Rnd 2 MK

TRACK Mülheim Kärlich | GRIP HI / MED / LOW | TRACK TEMP | HUMIDITY

COMPOSITION ASPHALT (INDOOR/OUTDOOR)/CARPET | SURFACE BUMPY/SMOOTH | LAYOUT OPEN/MIXED/TIGHT

RESULT 6th | BEST LAP 11.7

FRONT

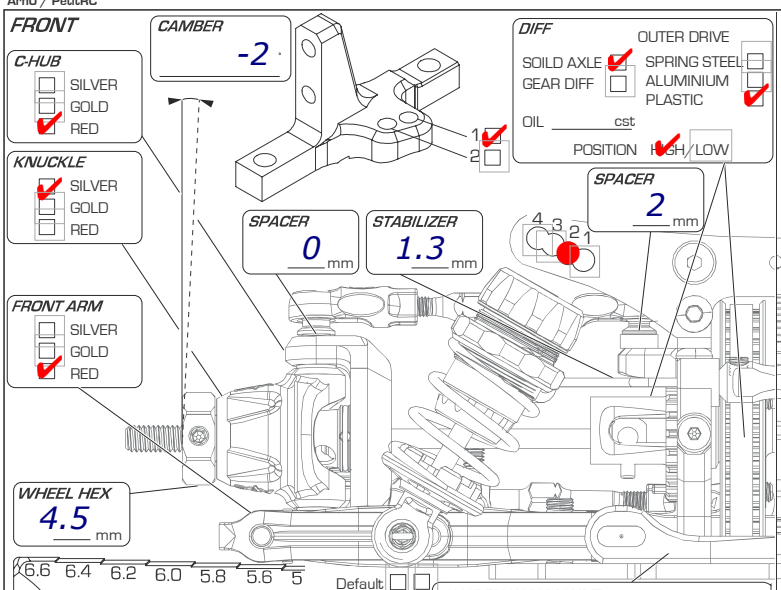

CAMBER -2

C-HUB: SILVER / GOLD / RED

KNUCKLE: SILVER / GOLD / RED

FRONT ARM: SILVER / GOLD / RED

WHEEL HEX 4.5 mm

SPACER 0 mm

STABILIZER 1.3 mm

SPACER 2 mm

DIFF: SOILD AXLE / GEAR DIFF

OUTER DRIVE: SPRING STEEL / ALUMINIUM / PLASTIC

OIL cst

POSITION HIGH/LOW

DOWNSTOP: 6.6 6.4 6.2 6.0 5.8 5.6 5

UNDER ARM 5.2 mm

Default

SUSPENSION MOUNT

SUSPENSION SHIM		INSERT
FF	0 mm	FF 3 NARROW/WIDE
FR	0 mm	FR 4 NARROW/WIDE

FF MOUNT: BRASS

FR MOUNT TYPE: BRASS / SOLID / SPLIT

REAR

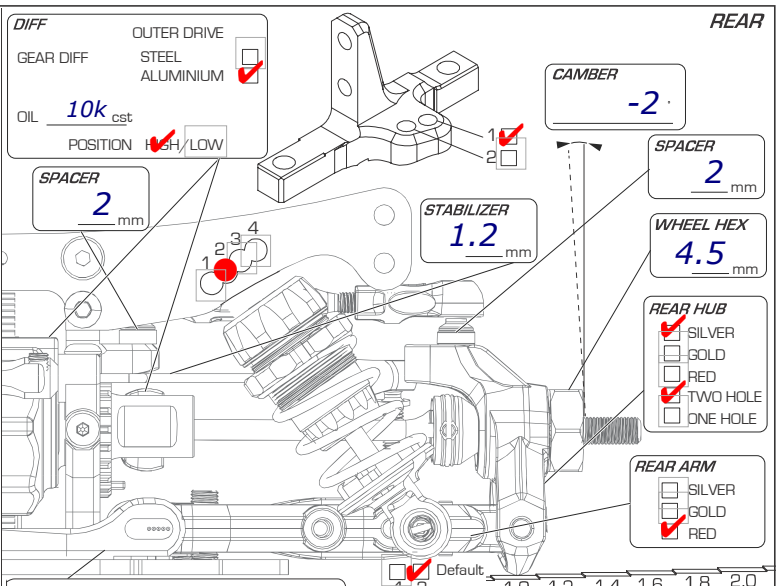

DIFF: GEAR DIFF

OUTER DRIVE: STEEL / ALUMINIUM

OIL 10k cst

POSITION HIGH/LOW

SPACER 2 mm

STABILIZER 1.2 mm

CAMBER -2

SPACER 2 mm

WHEEL HEX 4.5 mm

REAR HUB: SILVER / GOLD / RED / TWO HOLE / ONE HOLE

REAR ARM: SILVER / GOLD / RED

Default

DOWNSTOP: 1.0 1.2 1.4 1.6 1.8 2.0

UNDER HUB/ARM 1 mm

SUSPENSION MOUNT

SUSPENSION SHIM		INSERT
RF	0.5 mm	RF 3 NARROW/WIDE
RR	0.5 mm	RR 5 NARROW/WIDE

RR MOUNT: BRASS

RF MOUNT TYPE: BRASS / SOLID / SPLIT

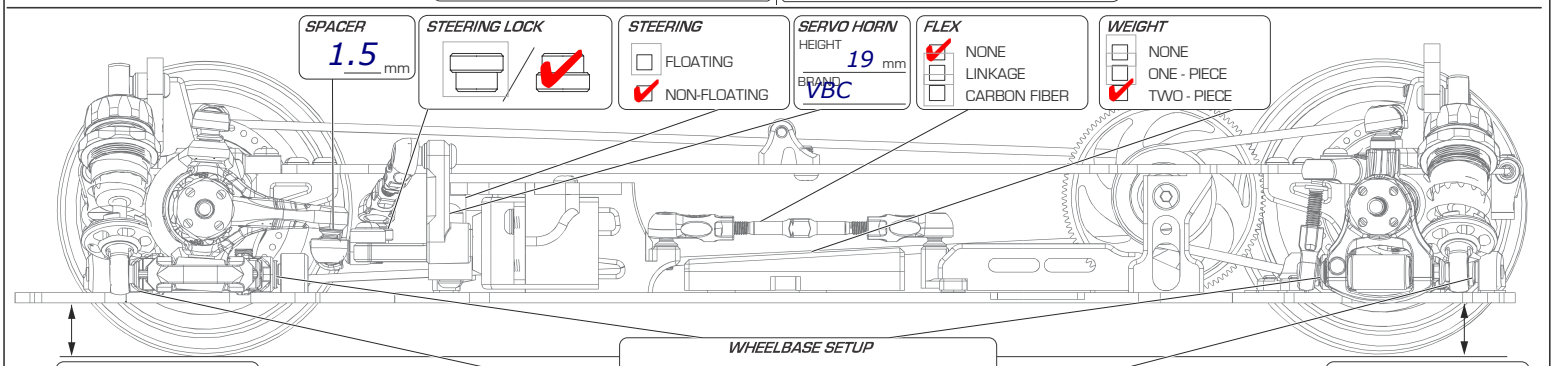

SPACER 1.5 mm

STEERING LOCK

STEERING: FLOATING / NON-FLOATING

SERVO HORN: HEIGHT 19 mm, BRAND VBC

FLEX: NONE / LINKAGE / CARBON FIBER

WEIGHT: NONE / ONE - PIECE / TWO - PIECE

GROUND CLEARANCE 5.0 mm

WHEELBASE SETUP

FF	FR	RF	RR
3 mm	1 mm	2 mm	2 mm

GROUND CLEARANCE 5.2 mm

FRONT SHOCK

PISTON 3 4 hole(s)

OIL MR33 500

SPRING Xray 2.7

SEALER CAP: CLEAR / BLACK / BLUE / RED

REBOUND 0 %

Hole in Cap

REAR SHOCK

PISTON 3 4 hole(s)

OIL MR33 500

SPRING Xray 2.6

SEALER CAP: CLEAR / BLACK / BLUE / RED

REBOUND 0 %

Hole in Cap

ARTS SETUP

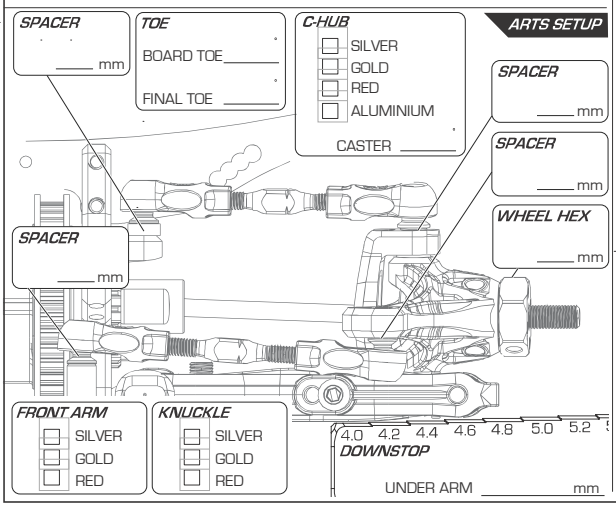

SPACER mm

TOE: BOARD TOE / FINAL TOE

C-HUB: SILVER / GOLD / RED / ALUMINIUM

CASTER

SPACER mm

SPACER mm

WHEEL HEX mm

SPACER mm

FRONT ARM: SILVER / GOLD / RED

KNUCKLE: SILVER / GOLD / RED

DOWNSTOP: 4.0 4.2 4.4 4.6 4.8 5.0 5.2

UNDER ARM mm

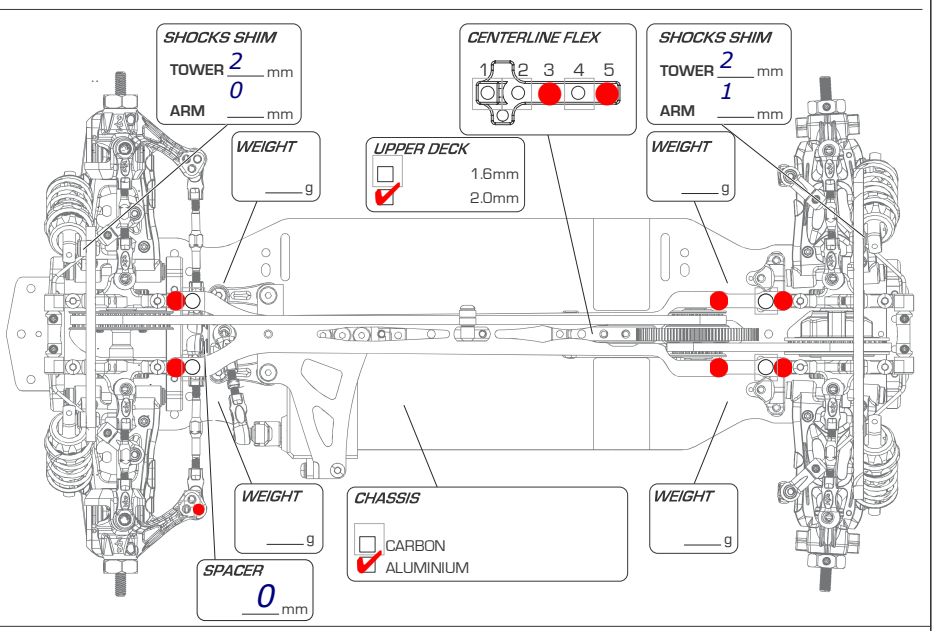

SHOCKS SHIM: TOWER 2 mm, ARM 0 mm

WEIGHT g

CENTERLINE FLEX: 1 2 3 4 5

UPPER DECK: 1.6mm / 2.0mm

SHOCKS SHIM: TOWER 2 mm, ARM 1 mm

WEIGHT g

WEIGHT g

CHASSIS: CARBON / ALUMINIUM

WEIGHT g

SPACER 0 mm

MOTOR	MM Fleta ZX 5.5	SPUR	153 T	PINION	41 T PITCH 84
TIRE	Volante	INSERT		WHEEL	
TIRE ADDITIVE	CS High	BODY	LTC-R	REAR WING	PF soft
ESC	MM Fleta Pro V2	BATTERY	Silverback SpiralII 6400		

Cut rear shock ball cup (13.5mm) / 27° steering limiter