1/10 Scale EP Touring Car

"Scythe" Setup Sheet for RC-Drifting.com

Name	Glen Westwood	Date	21/01/07	Humidity	10 %	Air Temp.	5 ℃
Track	Aldershot	Track Condition	bad 1 (2) 3 4 5 good			Track Temp.	0 ℃

Front Suspension

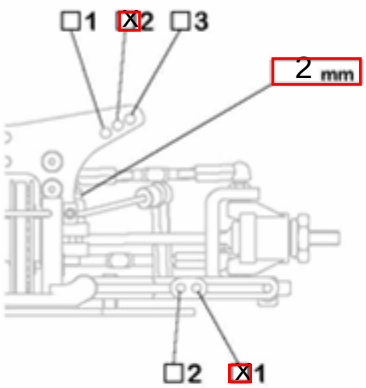

Camber Angle	-1 °
Castor	4 °
Ride Height	5.8 mm
Droop	+2.5 mm
FR. Drive	Spool
Stabilizer Bar	ϕ
Stick out	2 mm
Toe Angle	-0.5 °
Notes	Droop done in ride height

Sus. Mount F 2.5 R 0

Sus. Mount Spacer F 1 mm R 1 mm

Shock Absorber

	Front	rear
Piston & Holes	2+ 1.2mm	2+ 1.2mm
Oil	40wt	40wt
Spring	19lb	17lb
Diaphragm	std	std
Form		
Other	50% rebound	50%

Rear Suspension

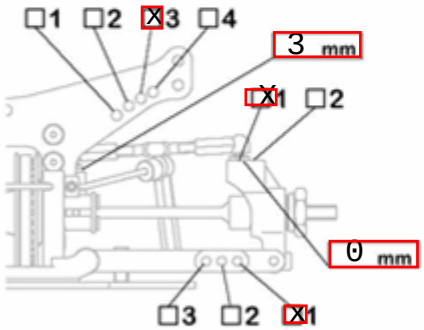

Camber Angle	-2 °
Ride Height	6 mm
Droop	+3.5 mm
Stabilizer Bar	ϕ
Stick out	flush mm
Upright Spacer	F 0 mm R 0 mm
Notes	Added More Droop for Bumps

Sus. Mount F R

Sus. Mount Spacer F mm R mm

Tire

	Front	rear
Brand	CS22	CS22
Insert	Pre-Built	
Wheel		
Additive	GW-Racing	

Spreaded Area

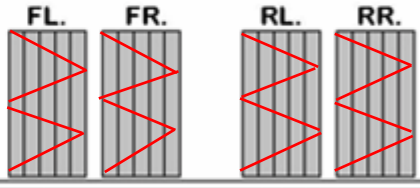

Ackermann

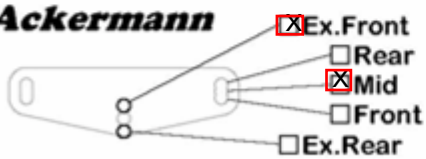

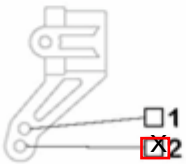

Power Source

Motor	C2 19turn	Battery	IB4200
Rotor	19x1		
Brush	Le-Mans		
Spring	Red-Red		
Timing			

Gear Ratio

Spur	102
Pinion	÷ 42
2nd Reduction	× 2.200
Over All Ratio	5.34

Radio

Transmitter	
Receiver	
Servo	
ESC	

Body

Mazda 6 Hot Bodies

Wing

Flattest