セッティング記録 / SETUP RECORD

名前: Name:_____ 日付: Date:_____ トラック: Track:_____

国籍: Country:_____ 条件: Condition:_____ 温度: Temperature:_____

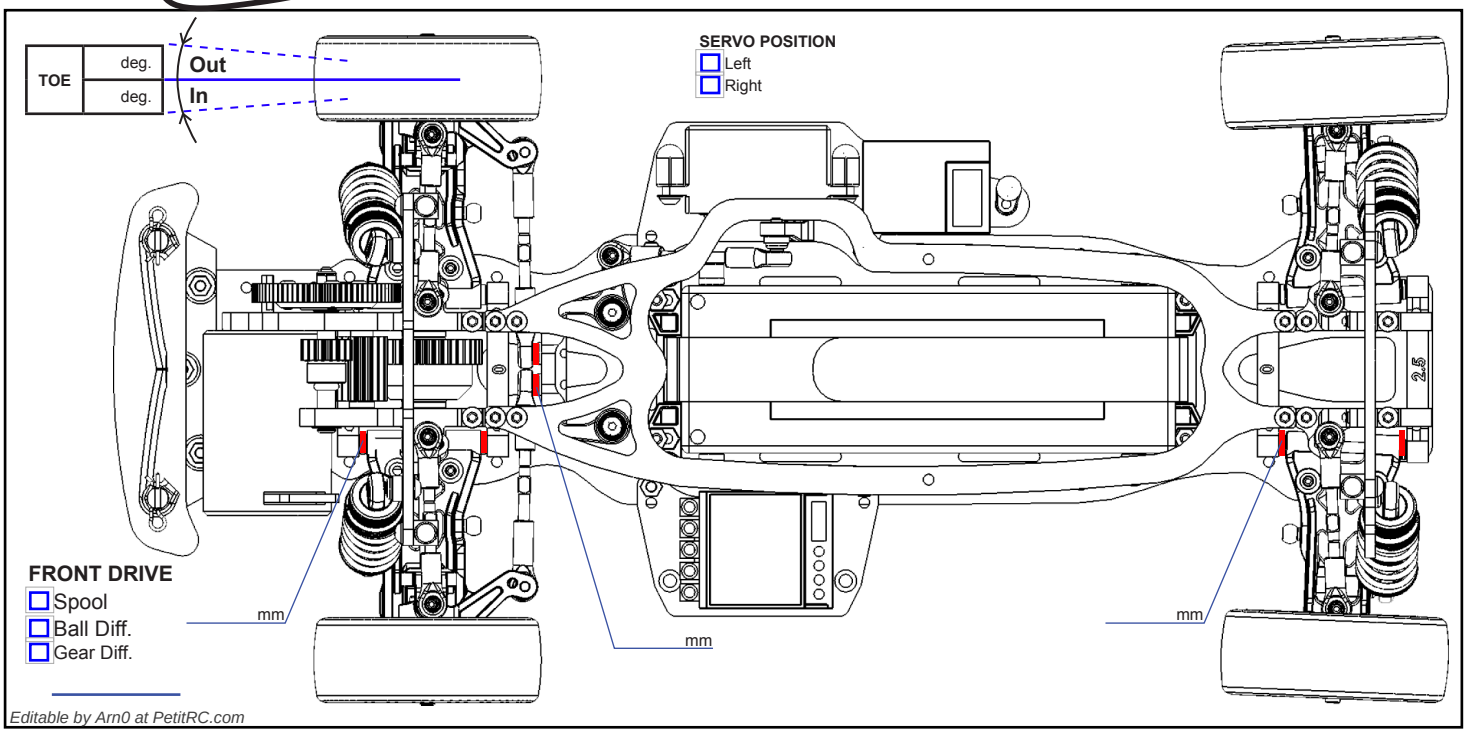

Editable by Arn0 at PetitRC.com

FRONT MEASUREMENTS		FRONT SHOCKS			
RIDE HEIGHT	mm	OIL WEIGHT			wt
CAMBER ANGLE	deg	PISTON	Opt.	1.0mm	2hole
WHEEL HUBS	mm		Std.	1.2mm	3hole
WHEEL SPACER	mm	BLADDER			
ROLL BAR	mm	SPRING			

REAR MEASUREMENTS		REAR SHOCKS			
RIDE HEIGHT	mm	OIL WEIGHT			wt
CAMBER ANGLE	deg	PISTON	Opt.	1.0mm	2hole
WHEEL HUBS	mm		Std.	1.2mm	3hole
WHEEL SPACER	mm	BLADDER			
ROLL BAR	mm	SPRING			

MOTOR	
PINION GEAR	
SPUR GEAR	
INTERNAL GEAR RATIO *2.4375*	
BATTERY	
BODY SHELLS	
WING	
ESC SETTING	
NOTES:	

	FRONT	REAR
BRAND		
COMPOUND		
INSERT		
WHEEL		
TIRE TREATMENT		

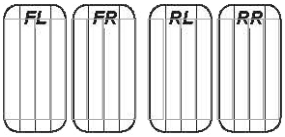
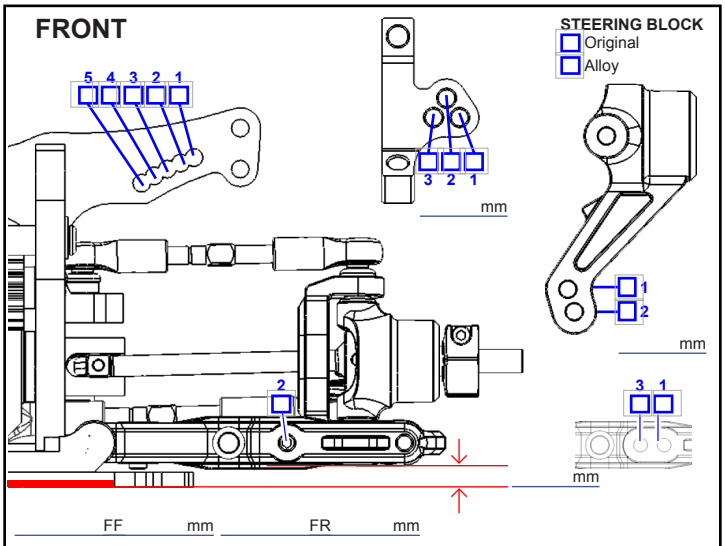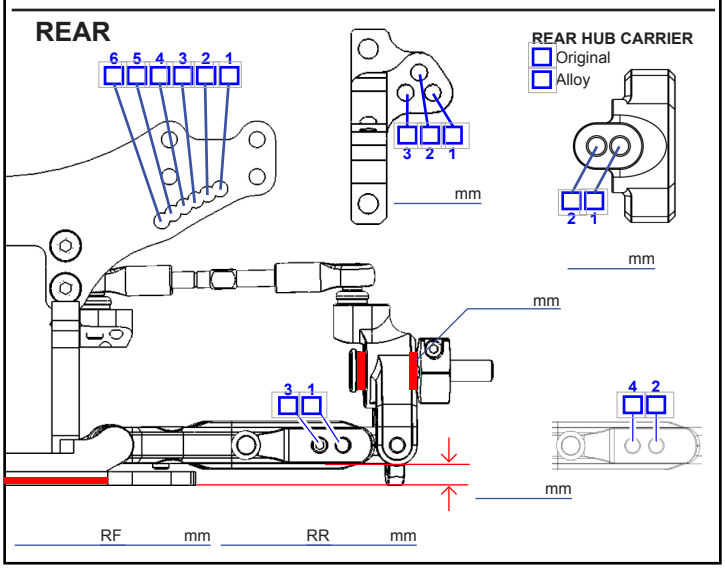
NOTES: