E4 RS EVO II
E4 Racing Spec. the Second Generation

Date: 10 June 2013 Driver: Chris Kyriacou
Event: Club Round Track: BRCCC (Bendigo)

SETUP SHEET

TRACK CONDITIONS

Type : ☐ Carpet ☑ Asphalt Size: ☐ Open ☑ Med. ☐ Tight
Place : ☐ Indoor ☑ Outdoor Traction: ☐ High ☑ Med. ☐ Low
Surface: ☐ Smooth ☑ Med. ☐ Bumpy Track Temp/Air Temp: ____ / 16
Note: Lots of steering -- lots of rear grip -- car very easy to drive--

FRONT SUSPENSION

Track Width: ____ mm ☐ Gear Diff ____ wt
Toe Angle: 2 ° ☑ Spool
Caster: 4 ° ☐ One Way
Camber: 2 °
Ride Height: 5.4 mm Anti-Roll Bar: ∅ 1.4 mm
Down Stop: 4.5 mm

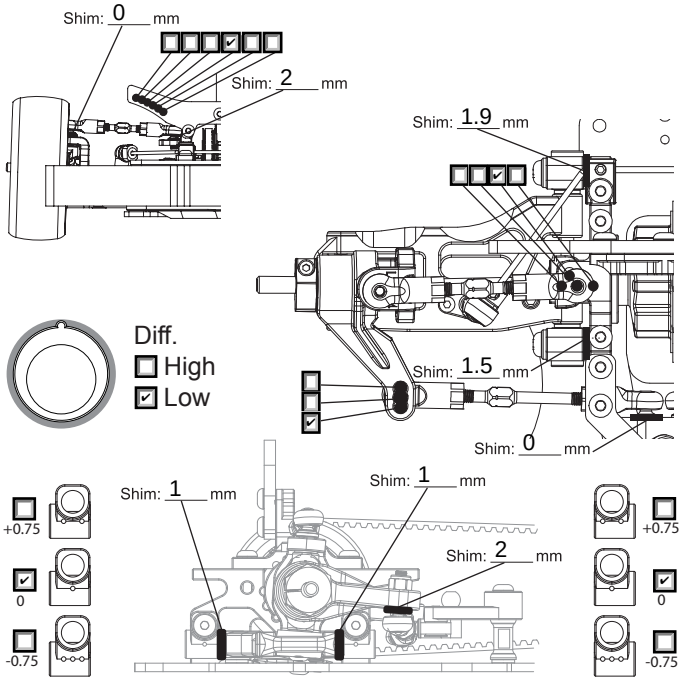

REAR SUSPENSION

Track Width: ____ mm Gear Diff 2000(AE) wt
Toe Angle: 3 °
Camber: 2 °
Ride Height: 5.6 mm
Down Stop: 4 mm Anti-Roll Bar: ∅ 1.2 mm

Motor Position: ☐ Inside (0mm) ☑ Outside (1mm) ☐ ____ mm

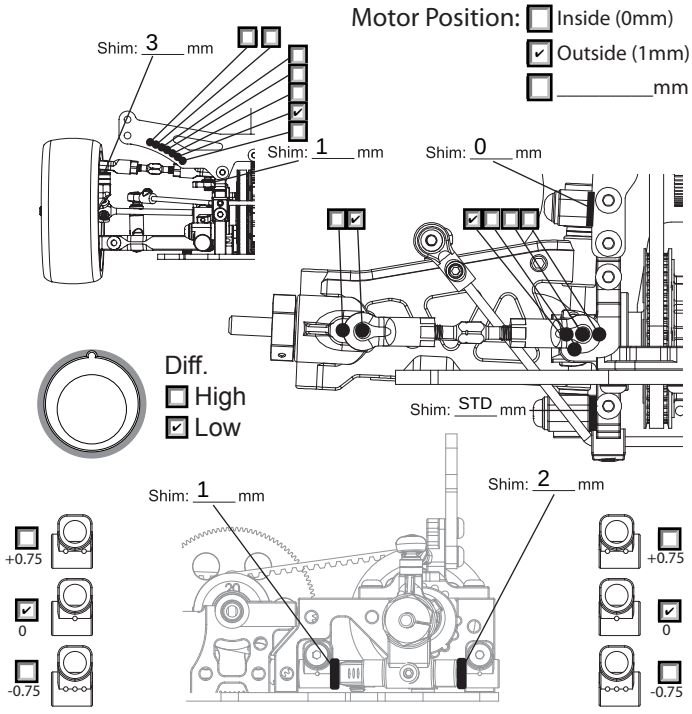

STIFF SETTING

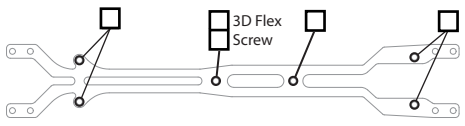

Upper Deck: ☑ 2.0mm ☐ 2.3mm ☐ 2.5mm

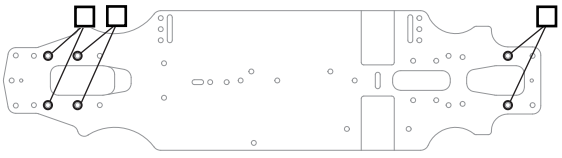

Chassis: ☑ 2.3mm ☐ 2.5mm ☐ 3.0mm

ELECTRONICS

Servo: Sanwa 801
ESC: Team Powers
Battery: T/Powers 7200

MOTOR

Brand: T/Powers v2
Turns: 4.0
Timing: -1

ESC

Punch: ____
Initial Brake: ____
Drag Brake: ____
☑ ESC Timing ☑ Turbo Timing

DRIVE RATIO

Spur 84 T / Pinion 18 T X1.9 = 8.87

TIRES

Insert: Ride 32
Wheel: Ride 32
Shore/deg: Ride 32
Compound: Ride 32
Tire Temp: 70°
Tire additive: Tire Tweak
Treated Area

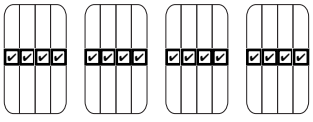

SHOCKS

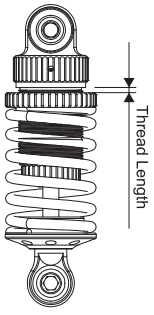

Hole Size: F 1.1 R 1.1
Holes In Piston: F 3 R 3
Oil wt: F 350xray R 350xray
Springs: F tshox/Green R tshox/Green
Rebound: F 5% R 5%
Bladder Note: std

Thread Length: F .5 R .5

BODY

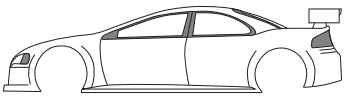

Body: Ltc-r
Wing Height: std
Wing Position: std