SUPERIOR MATCHING CONCEPTS

ESC Wiring and Setup Instructions

ESC Specifications

Amps	160
Resistance	0.0003 ohm
Size	L41.5mm x W31.5mm x H22.5mm this is the footprint. Width including the board with wires is 37.5mm
Weight	45g without fan or wires
Case	Aluminum case for maximum cooling
BEC	6 volts at 3 amps
Battery	2S or 3S Lipo/LiFe
Motor Type	540 brushless sensored/sensorless
Switch	Integrated on/off switch

ESC Features

- Compatible with Sensored/Sensorless brushless motors.
- Data analysis.
- PC Interface for advanced programming and updating.
- Easily Programming through the program card.
- Built-in one touch On/Off switch with LED.
- Built-in Low voltage cut-off, Overheat protection and signal loss protection.

Setting Neutral, Forward and Brake Endpoints of the ESC

1. Ensure ESC is wired properly using the diagram and steps above.
2. Set Transmitter Throttle and Brake EPA to 100%.
3. Turn ESC and Transmitter off.
4. Turn on Transmitter and leave throttle stick/trigger at neutral position.
5. Connect battery to ESC.
6. Press and hold the on/off button to turn esc on until a BLUE Led is lit up.
7. After the BLUE Led is lit up, the ESC is in throttle range setting mode and neutral position has been set.
8. Move the throttle to the full throttle position, then the BLUE Led will be flashing until a Solid BLUE Led will be light up. Light up BLUE Led represent the full throttle position has been set.
9. Move the throttle stick to the full brake position, then the RED Led will be flashing until a solid RED Led will be light up. Light up RED Led represent the full brake position has been set.
10. Move the throttle stick back the neutral position again, then the flashing RED & BLUE(purple color) Led will be light up that means throttle range setting has been completed.
11. The speed control will be ready for use when it powers is off and on again.

Connection Diagram & Installation

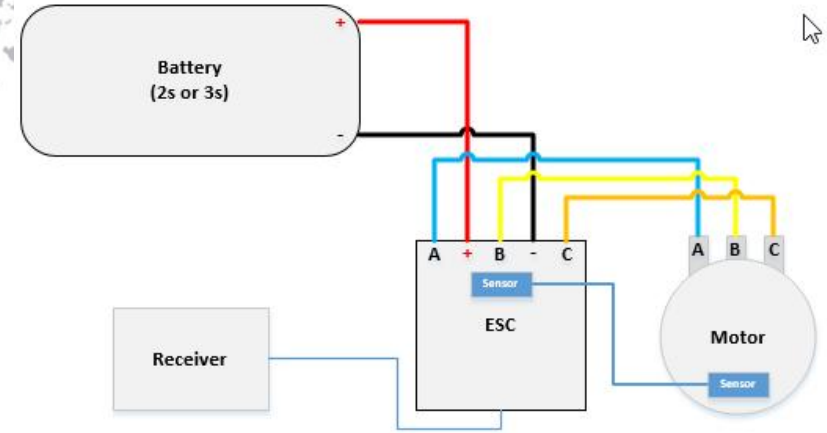

1. Connect the speed control to the receiver position (channel 2).
2. Connect power wire “A” to the motor “A” solder-tabs.
3. Connect power wire “B” to the motor “B” solder-tabs.
4. Connect power wire “C” to motor “C” solder-tabs.
5. Connect the hall sensor cable between the speed control (underneath the solder taps) and motor.
6. Connect power wire ”+” to battery “+” sign .
7. Connect power wire “-“ to battery “-” sign.

Using the Program Box

1. Disconnect the ESC from the receiver and plug the connector into the Program Box in the slot labelled ESC. Make sure to respect the polarity.
2. Turn on the ESC and the Program Box will turn on.
3. Press the **mode button** and you will then be in mode setting. If you want to change the setting for that particular mode you press on the **Item button** this will increase the value. If you gone too far you can hit the reset button to comeback to default setting.
4. Once you have reached the desired adjustment you press on the **update button**.
5. To select another mode to adjust, press the **mode button** to go to the next adjustment and repeat the process (step 3 and 4).