BLACKBOX 1000Z+

ELECTRONICS SET-UP SHEET

Voltage input:	2S LiPo
On resistance (Ω)	0.00014
Continuous current (A)	100
Dimensions (mm)	40.2 x 31.0 x 21.9
Weight w/o wires & fan (g)	40
Motor limit	5.5T
BEC	6.0 / 3A

DRIVER: _____ EVENT: _____ TRACK: _____ DATE: _____

VEHICLE: _____ CONDITIONS: _____ BATTERY: _____ TEMP: _____

ESC INFO

CAPACITOR TYPE:	
WIRE SIZE:	

BRAKE

DRAG BRAKE:	
BRAKE FREQ:	

THROTTLE

THROTTLE FREQ:	
POWER PROFILE:	

MISC CONTROL

OPERATION MODE:	

MOTOR SETTINGS

MOTOR:	
WIND:	
TIMING:	
ROTOR:	
FDR/ROLLOUT:	
TEMPERATURE:	

RADIO SETTINGS

THROTTLE EPA:	
BRAKE EPA:	
THROTTLE EXPO:	
BRAKE EXPO:	

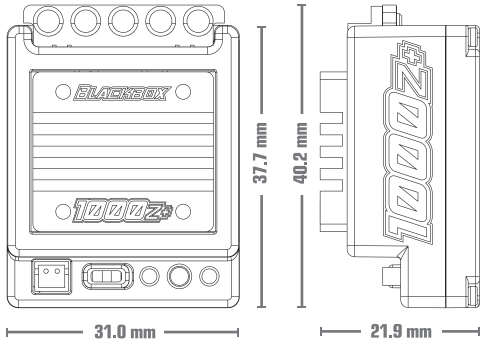

NOTES:

REEDY POWERED

www.ReedyPower.com

www.facebook.com/ReedyPower

twitter.com/ReedyPower