SETUP SHEET

MTS -T2

NAME	Brian Stewart
DATE	
EVENT	TQ and Win
TRACK	SERCCC - BITTERN CLUB DAY

TRACK CONDITION: [x] Asphalt (Indoor/Outdoor) [ ] Carpet [ ] Technical [ ] Mixed [ ] Fast [x] Low [ ] Medium [ ] High [ ] Bumpy [ ] Smooth

HUMIDITY	TEMP AIR	TRACK
	24	

MOTOR: MUCHMORE FLETA V2 FIXED 17.5 GT CONTROL

PINION	SPUR	PITCH
51	100	64p

ESC: Team Powers Radon sport V2

BATTERY: Team Powers 6400 - 100C

FRONT	SHOCKS	REAR
XRAY 2.5-2.8	SPRING	XRAY 2.6
4h 1.1	PISTON	4H 1.1
450	OIL	450
60mm	LENGTH	60mm
	PRELOAD	
10%	REBOUND	10%
[ ] Yes [x] No	FOAM INSERTS	[ ] Yes [x] No
-	O RING ON SHAFT	-

Kit	ANTIROLL BAR	Kit

TIRE	CONTROL VOLANTE 36-GT CLASS
RIM	
INSERT	
ADDITIVE	VOLANTE PURPLE
SURFACE	ASAPHALT

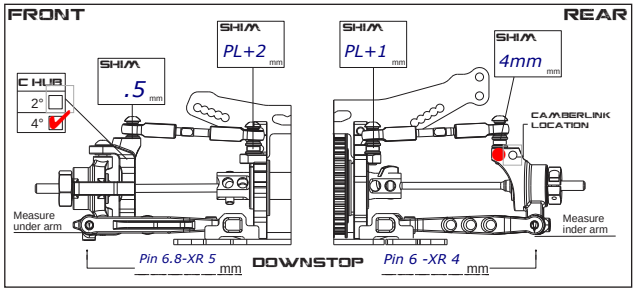

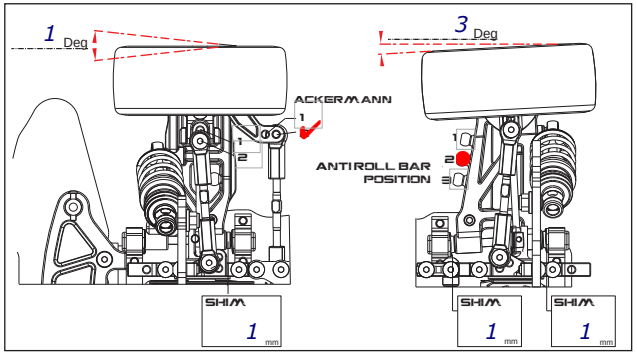

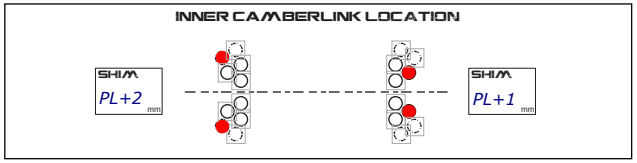

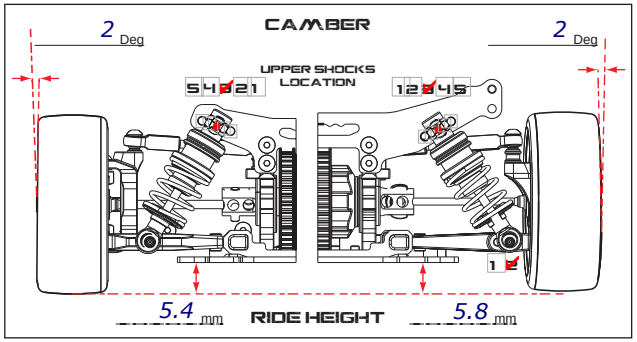

Generates good grip for conditions with good rotation. Shortening rear wheelbase to be tested along with narrow hexes.
Exotek P-Zero and Protoform Mclaren bodies tested. Mclaren best for the club day conditions
Team Powers Primus Servo mounted forward as possible using 4.5mm shims. Team Powers 2S PS Capacitor. Race Opt front Belt - Team Powers 40mm fan hardwired +-
VBC front and rear camber link cups/balls - Bezerk Carbon bumper plate.
Rear Spur gear mount chassis screws removed for more consistent flex. Minimal screws in top deck/rod system. No shims under central rod hinge plate. 1mm shim under rear of flex rod and 2mm under front of flex rod. Use strong Loctite on rod screws. 2 screws only on front of top deck. Cutting top deck may be beneficial along with using cut rear cop deck (Portelli)
Full X-Ray Plastics on this car - 2017 Xray Shocks.
+++++If using kit MTS plastics+++++ Brad Portelli C-Hub mod and I think with outer camber hole on kit rear hub. Droop measured to base of outer pins is around 6.8 F and 6 R. Should equate to 5 F and 4 R using Xray arms measured under regular arm location.

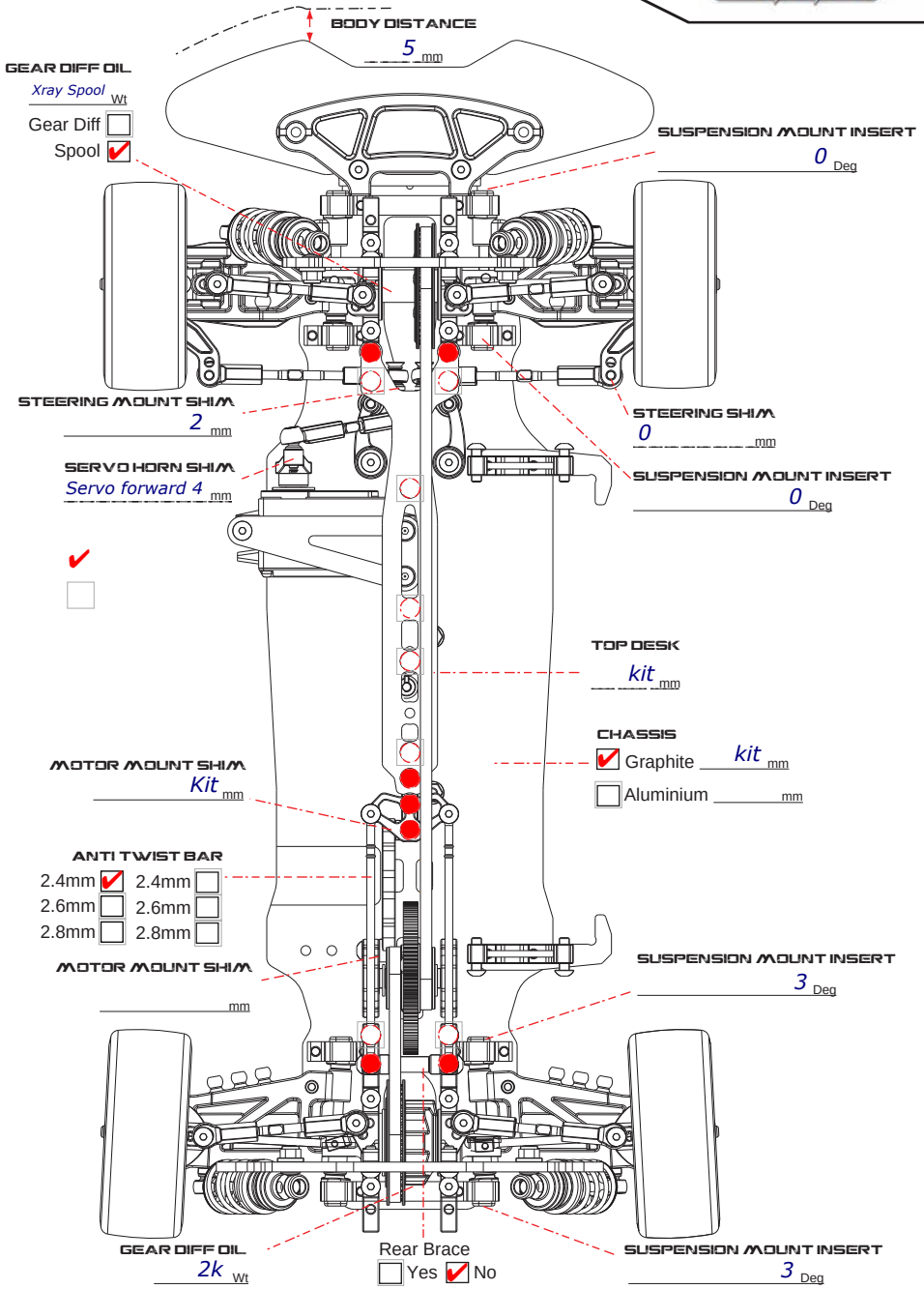

Arn0 / PetitRC.com

RACE OPT