1/10th Scale Electric Touring Car MTC1 Parts List (A2001)

1/10スケール電動ツーリングカー MTC1 パーツリスト (A2001)

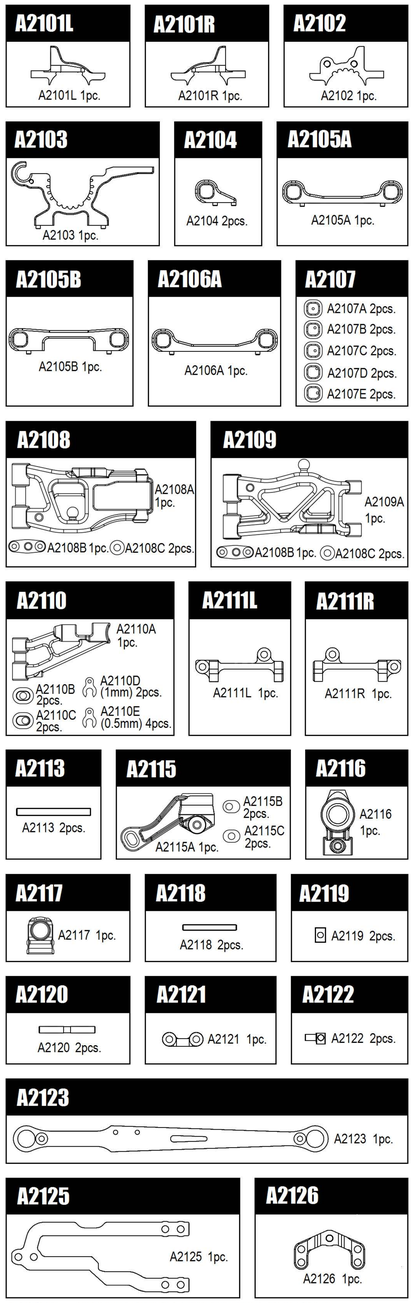

A2101L FRONT ALUM UPPER BULKHEAD L
A2101R FRONT ALUM UPPER BULKHEAD R
A2102 REAR ALUM UPPER BULKHEAD
A2103 LOWER ALUM BULKHEAD
A2104 LOWER ALUM ARM MOUNT SEPARATE
A2105A LOWER ALUM ARM MOUNT FRONT/FRONT
A2105B LOWER ALUM ARM MOUNT FRONT/REAR
A2106A LOWER ALUM ARM MOUNT REAR/REAR
A2107 LOWER ARM BUSHING SET
A2108 FRONT LOWER SUSPENSION ARM
A2109 REAR LOWER SUSPENSION ARM
A2110 FRONT UPPER SUSPENSION ARM
A2111L FRONT ALUM UPPER ARM MOUNT L
A2111R FRONT ALUM UPPER ARM MOUNT R
A2113 FRONT UPPER ARM HINGE PIN
A2115 FRONT UPRIGHT
A2116 REAR UPRIGHT
A2117 FRONT ALUM CASTER BLOCK
A2118 FRONT CASTER BLOCK PIN
A2119 CASTER BLOCK BUSHING
A2120 REAR UPRIGHT PIN
A2121 REAR CAMBER LINK MOUNT
A2122 ARB BUSHING
A2123 FRONT GRAPHITE UPPER DECK ULTRA FLEX
A2125 REAR GRAPHITE UPPER DECK ULTRA FLEX
A2126 FRONT UPPER DECK MOUNT ULTRA FLEX

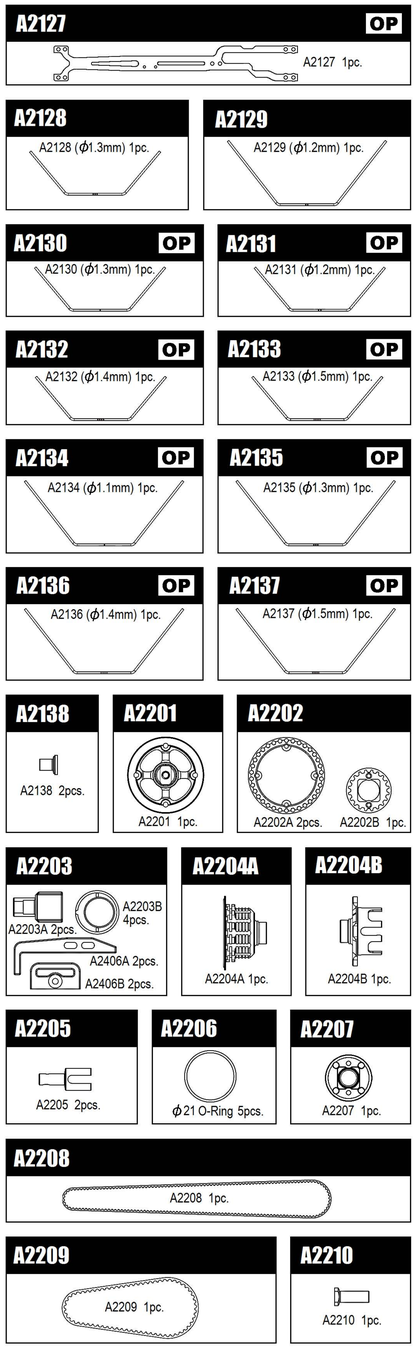

A2127 UPPER GRAPHITE DECK OP
A2128 FRONT ANTI-ROLL BAR (ϕ1.3mm)
A2129 REAR ANTI-ROLL BAR (ϕ1.2mm)
A2130 FRONT ANTI-ROLL BAR (ϕ1.1mm) OP
A2131 FRONT ANTI-ROLL BAR (ϕ1.2mm) OP
A2132 FRONT ANTI-ROLL BAR (ϕ1.4mm) OP
A2133 FRONT ANTI-ROLL BAR (ϕ1.5mm) OP
A2134 REAR ANTI-ROLL BAR (ϕ1.1mm) OP
A2135 REAR ANTI-ROLL BAR (ϕ1.3mm) OP
A2136 REAR ANTI-ROLL BAR (ϕ1.4mm) OP
A2137 REAR ANTI-ROLL BAR (ϕ1.5mm) OP
A2138 FRONT UPRIGHT BUSHING
A2201 FRONT SOLID AXLE
A2202 PULLEY 34T/20T
A2203 SOLID AXLE/ECCENTRIC HUB/BATTERY MOUNT
A2204A ALUM DIFFERENTIAL CASE R
A2204B ALUM DIFFERENTIAL CASE L
A2205 DIFFERENTIAL OUTDRIVE
A2206 O-RING FOR DIFFERENTIAL CASE
A2207 PULLY ADAPTER
A2208 FRONT BELT
A2209 REAR BELT
A2210 SPUR GEAR SHAFT

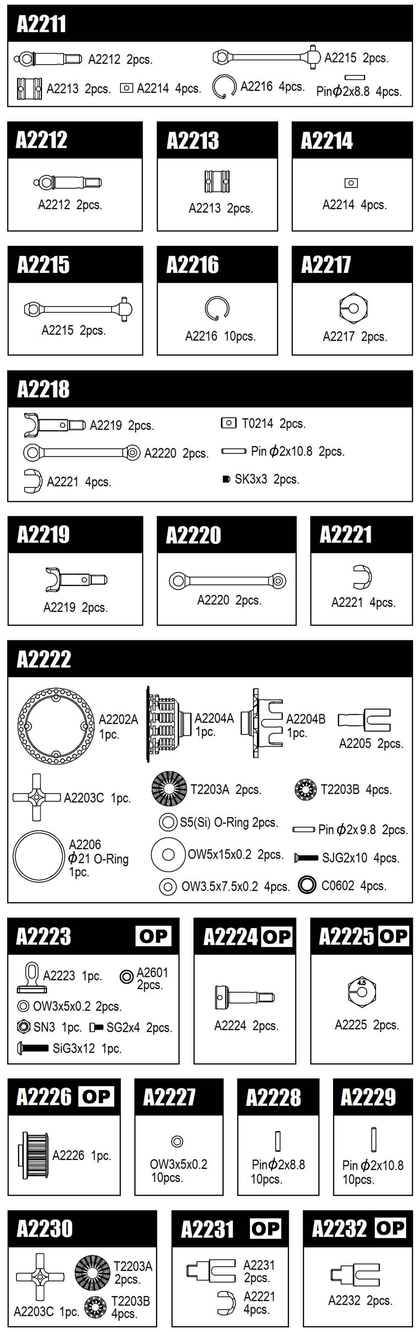

A2211 FRONT DRIVE SHAFT SET
A2212 FRONT WHEEL AXLE
A2213 FRONT DRIVE SHAFT BUSHING FOR PIN
A2214 FRONT JOINT SHAFT
A2215 FRONT DRIVE SHAFT
A2216 FRONT DRIVE SHAFT CLIP
A2217 WHEEL HUB (5mm)
A2218 REAR DRIVE SHAFT SET
A2219 REAR WHEEL AXLE
A2220 REAR DRIVE SHAFT
A2221 DRIVE SHAFT BLADE
A2222 DIFFERENTIAL SET
A2223 BELT TENSIONER SET OP
A2224 ALUM REAR WHEEL AXLE OP
A2225 WHEEL HUB (4.5mm) OP
A2226 ALUM PULLEY 20T OP
A2227 SHIM SET (ϕ3xϕ5x0.2) 10pcs.
A2228 PINS (ϕ2x8.8)
A2229 PINS (ϕ2x10.8)
A2230 DIFFERENTIAL GEARS & CROSS SHAFT
A2231 ALUM SPOOL OUTDRIVE OP
A2232 STEEL SPOOL OUTDRIVE OP

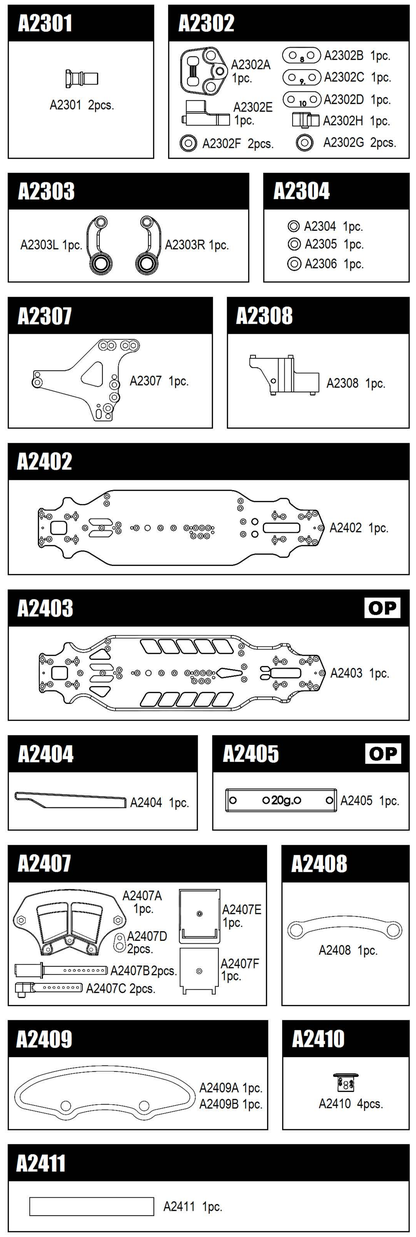

A2301 STEERING LEVER SHAFT
A2302 STEERING PLATE + PARTS
A2303 ALUM STEERING LEVER L/R
A2304 STEERING STOPPER COLLAR
A2307 GRAPHITE SERVO PLATE
A2308 SERVO MOUNT
A2402 CHASSIS (CFRP)
A2403 CHASSIS (ALUMINUM) OP
A2404 PITCH STIFFENER ALUM
A2405 CENTER WEIGHT 20g OP
A2407 FRONT BUMPER + PARTS
A2408 GRAPHITE BUMPER BRACE
A2409 FOAM BUMPER
A2410 BODY HEIGHT ADJUSTER
A2411 RUBBER BATTERY TAPE

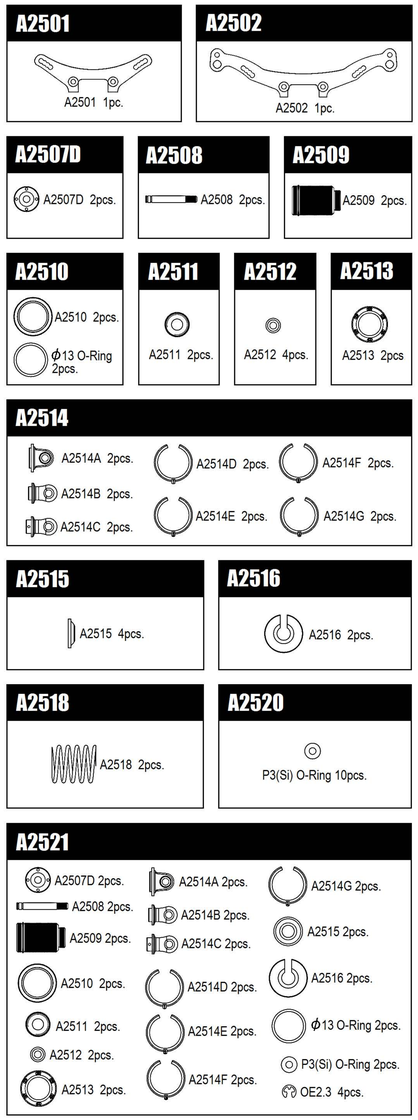

A2501 FRONT GRAPHITE SHOCK TOWER
A2502 REAR GRAPHITE SHOCK TOWER
A2507D SHOCK PISTON
A2508 SHOCK SHAFT
A2509 SHOCK CASE
A2510 SHOCK SPRING TENSION NUT W/O-RING
A2511 SHOCK LOWER TIP NUT
A2512 SHOCK SHAFT BUSHING
A2513 SHOCK UPPER TIP NUT
A2514 SHOCK BALL JOINTS + PARTS
A2515 SHOCK MEMBRANE
A2516 SHOCK SPRING SHEET BOTTOM COLLAR
A2518 SHOCK SPRING
A2520 O-RING SET P3 (Si)
A2521 SHOCK SET

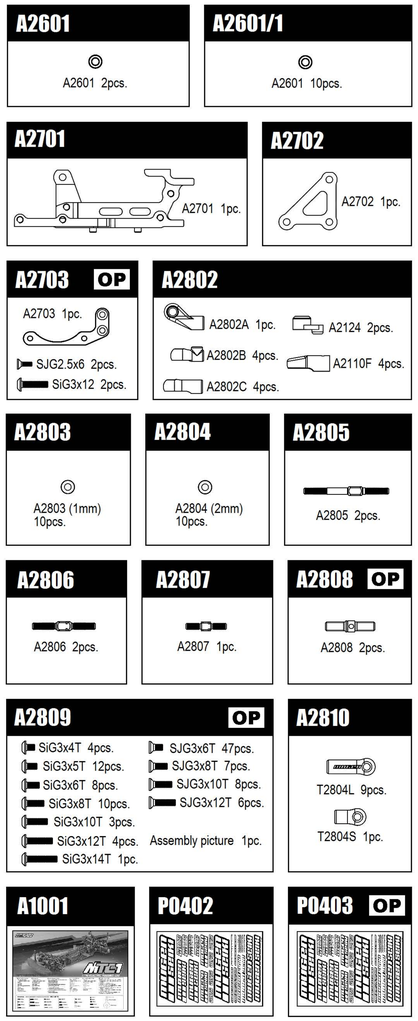

A2601 BEARINGS (ϕ3xϕ6x2.5) 2pcs.
A2601/1 BEARINGS (ϕ3xϕ6x2.5) 10pcs.
A2701 MOTOR MOUNT
A2702 GRAPHITE MOTOR MOUNT BRACE
A2703 ALUM FAN MOUNT OP
A2802 BALL JOINTS
A2803 SHIMS (ϕ3xϕ6x1) 10pcs.
A2804 SHIMS (ϕ3xϕ6x2) 10pcs.
A2805 ALUM TURNBUCKLE (38mm)
A2806 ALUM TURNBUCKLE (28mm)
A2807 ALUM TURNBUCKLE (18mm)
A2808 ALUM TURNBUCKLE M4 OP
A2809 TITANIUM SCREW SET OP
A2810 BALL LINK SET (LONGx9pcs./SHORTx1pc.)
A1001 MTC1 INSTRUCTION MANUAL
P0402 12 LOGO STICKER
P0403 12 LOGO STICKER (METALLIC) OP

1/10th Scale Electric Touring Car MTC1 Parts List (A2001)

1/10スケール電動ツーリングカー MTC1 パーツリスト (A2001)

J0105U
J0105U 2pcs.

T0214
T0214 2pcs.
SK3x2.6 2pcs.

T0215
φ2x9.8 Pin 8pcs.

E0257
S5 O-Ring (Si) White 10pcs.

C0602/1
C0602 2pcs. (5x8)

C0602/2
C0602 10pcs. (5x8)

T2116
T2116 2pcs.

T2148
T2148 2pcs.

T2226
OW3.5x7.5x0.2 8pcs.
OW5x15x0.2 4pcs.

T2303-B
T2303K 2pcs.
T2303L 2pcs.
T2303M 2pcs.
T2303A 1pcs.
A2303B-B 1pc.
T2303C 1pcs.
T2303J 1pcs.
T2303G 1pc.
T2303H 1pc.
T2303i 1pc.

T2309
T2309A 2pcs.
H2307 2pcs.

E2601
E2601 2pcs. (5x10x4)

E2601/1
E2601 10pcs. (5x10x4)

T2601
T2601 2pcs. (10x15x4)

T2601/1
T2601/1 10pcs. (10x15x4)

H2603
H2603 2pcs. (3x6 FLANGE)

T2802
T2802 2pcs.

T2803
T2803 4pcs.

T2805
T2805 4pcs.

E2808
E2808 (150mm) 4pcs.

Not used in this kit.

B0310~
1pc.

B0321~
1pc.

B0330
B0330 1pc.

B0339
B0339 1pc.

B0406
B0406 2pcs.

B0407
B0407 15pcs.

B0422
B0422 8pcs.

B0429
B0429 1pc.
B0430F 1pc.
B0430J 1pc.
B0430K 1pc.
B0430S 1pc.
B0430H 1pc.

B0430
B0430F 1pc.
B0430J 1pc.
B0430S 1pc.
B0430H 1pc.
B0430K 1pc.

B0432
B0432 5pcs.

B0510
B0510 1pc.

B0523~
1pc.

B0523/1~
1pc.

B0530
B0530 1pc.

B0531
B0531 1pc.

B0533
B0533 1pc.

B0535~
1pc.

B0538

B0546
B0546 1pc.

OTHER PARTS

B0310	SUPER SILICONE #100
B0311	SUPER SILICONE #150
B0312	SUPER SILICONE #200
B0313	SUPER SILICONE #250
B0314	SUPER SILICONE #300
B0315	SUPER SILICONE #350
B0316	SUPER SILICONE #400
B0317	SILICONE FOR DIFF. #10000
B0318	SILICONE FOR DIFF. #30000
B0321	SILICONE FOR DIFF. #3000
B0322	SILICONE FOR DIFF. #5000
B0323	SILICONE FOR DIFF. #7000
B0324	SILICONE FOR DIFF. #1000
B0325	SUPER SILICONE #500
B0326	SUPER SILICONE #600
B0327	SUPER SILICONE #700
B0328	SUPER SILICONE #800
B0330	SUPER JOINT GREASE
B0332	SUPER SILICONE #450
B0333	SUPER SILICONE #550
B0334	SILICONE FOR DIFF. #2000
B0335	SILICONE FOR DIFF. #4000
B0337	SILICONE FOR DIFF. #15000
B0338	SILICONE FOR DIFF. #20000
B0339	PREMIUM GREASE
B0348	SUPER SILICONE #650
B0350	SILICONE FOR DIFF. #6000
B0406	BOTH SIDED ADHESIVE TAPE
B0407	FLAT WASHER 3mm
B0422	BODY PIN S
B0429	AL. SERVO HORN SET
B0430	SERVO HORN PARTS
B0432	ANTENNA CAP (5pcs.)
B0510	CAMBER GAUGE
B0523	1.5mm Hex. WRENCH
B0524	2.0mm Hex. WRENCH
B0525	2.5mm Hex. WRENCH
B0526	3.0mm Hex. WRENCH
B0527	2.0mm Ball-Hex. WRENCH
B0528	2.5mm Ball-Hex. WRENCH
B0523/1	SPARE TIP FOR 1.5mm Hex. WRENCH
B0524/1	SPARE TIP FOR 2.0mm Hex. WRENCH
B0525/1	SPARE TIP FOR 2.5mm Hex. WRENCH
B0526/1	SPARE TIP FOR 3.0mm Hex. WRENCH
B0527/1	SPARE TIP FOR 2.0mm Ball-Hex. WRENCH
B0528/1	SPARE TIP FOR 2.5mm Ball-Hex. WRENCH
B0530	2.0mm Hex. WRENCH TIP FOR ELECTRIC DRIVER
B0531	2.5mm Hex. WRENCH TIP FOR ELECTRIC DRIVER
B0533	CURVED SCISSORS
B0535	BOX WRENCH 5.5mm
B0536	BOX WRENCH 7.0mm
B0537	BOX WRENCH 5.0mm
B0538	PRO SPEC Hex. WRENCH SET
B0546	RIDE HEIGHT GAUGE R

SCREW / NUT

B06608	SG2x4 CAP SCREW (8pcs.)
B0670	SK3x3 SET SCREW
B0671	SK3x5 SET SCREW
B0672	SK3x12 SET SCREW
B0673	SK3x8 SET SCREW
B0674	SK3x2.6 SET SCREW (6pcs.)
B0716	AL. FLANGE NUT 4mm (5pcs.)
B07202	OE-2.3 E-RING
B0730	SiG 3x8 B/H SCREW
B07306	SiG 2x6 B/H SCREW (8pcs.)
B0731	SiG 3x10 B/H SCREW
B0732	SiG 3x12 B/H SCREW
B0733	SiG 3x14 B/H SCREW
B0736	SiG 3x6 B/H SCREW
B0739	SiG 3x4 B/H SCREW
B0740	SJG 3x8 F/H SCREW
B07401	SJG 2x8 F/H SCREW (8pcs.)
B0741	SJG 3x10 F/H SCREW
B0742	SJG 3x6 F/H SCREW
B0743	SJG 3x12 F/H SCREW
B0754	SJG 2x6 F/H SCREW
B0757	SJG 2x10 F/H SCREW (8pcs.)
B0759	SJG 2.5x6 F/H SCREW
B0761	SFG 3x6 BF/H SCREW
B0730T	SiG 3x8 TITANIUM B/H CAP SCREW
B07303T	SiG 3x5 TITANIUM B/H CAP SCREW
B0731T	SiG 3x10 TITANIUM B/H CAP SCREW
B0732T	SiG 3x12 TITANIUM B/H CAP SCREW
B0733T	SiG 3x14 TITANIUM B/H CAP SCREW
B0736T	SiG 3x6 TITANIUM B/H CAP SCREW
B0739T	SiG 3x4 TITANIUM B/H CAP SCREW
B0740T	SJG 3x8 TITANIUM F/H CAP SCREW
B0741T	SJG 3x10 TITANIUM F/H CAP SCREW
B0742T	SJG 3x6 TITANIUM F/H CAP SCREW
B0743T	SJG 3x12 TITANIUM F/H CAP SCREW

J0105U	REAR UPPER SUS. SHAFT
T0214	JOINT SHAFT
T0215	JOINT PIN (φ2x9.8)
E0257	S5 O-RINGS (SILICONE)
C0602/1	BEARINGS (5x8x2.5) 2pcs.
C0602/2	BEARINGS (5x8x2.5) 10pcs.
T2116	PIVOT BALL
T2148	AL. PIVOT BALL φ7
T2226	DIFF. GEAR WASHER
T2303-B	SERVO SAVER PARTS
T2309	BRAKE PAD SHAFT
E2601	BEARINGS (5x10) 2pcs.
E2601/1	BEARINGS (5x10) 10pcs.
T2601	L.F. BEARINGS (10x15x4) 2pcs.
T2601/1	L.F. BEARINGS (10x15x4) 10pcs.
H2603	BEARINGS (3x6 FLANGE)
T2802	TURN BUCKLE M4
T2803	UNIBALL 1
T2805	AL. PIVOT BALL φ6
E2808	ANTENNA PIPE (150mm)

株式会社 無限精機 〒274-0817 千葉県船橋市高根町1395
MUGEN SEIKI CO.,LTD.
1395 Takane-Cho, Funabashi, Chiba 274-0817, Japan
表示価格には消費税が含まれていません。