mugen seiki — MTC1

| | |
|---|---|
| DATE | 03.12.2017 |
| DRIVER | Eric Dankel |
| TRACK | Charity race, Scandiano |

CARPET ☑ ASPHALT ☐

## TRACTION

| LOW ☐ | MEDIUM ☐ | HIGH ☑ |
|---|---|---|

## LAYOUT

| SLOW ☐ | MIXED ☐ | FAST ☑ |
|---|---|---|

## ELECTRIC`S

| | TYPE | SETTINGS |
|---|---|---|
| STEERING SERVO | Sanwa | |
| ESC | Muchmore | |
| ENGINE | Muchmore | |
| TYRES/ ADDITIVE | CS High | TYPE |

| FRONT | | REAR | |
|---|---|---|---|
| FULL | ☐ | FULL | ☑ |
| MIN. | 3 | MIN. | 5 |

## SHOCK ABSORBERS

| FRONT | | REAR | |
|---|---|---|---|
| PISTON | 4 | PISTON | 4 |
| OIL | 450 | OIL | 550 |
| SPRING | XR2.8 | SPRING | XR2.9 |

## ANTI ROLL BAR FRONT

1,2 ☐ 1,3 ☐ 1,4 ☑ 1,5 ☐

## ANTI ROLL BAR REAR

1,1 ☐ 1,2 ☐ 1,3 ☑ 1,4 ☐

## SERVO SAVER POSITION

FORWARD ☐ REARWARD ☑

8 ☑ 9 ☐ 10 ☐

| PINION | | SPUR | |
|---|---|---|---|
| DIFF | | SPOOL | |
| HIGH | ☐ | HIGH | ☐ |
| LOW | ☑ | LOW | ☑ |
| DIFF OIL CST | | Mugen 7000 | |

## SHOCK POSITION LOWER ARM

| PART# | REAR kit | PART# | FRONT kit |
|---|---|---|---|
| HOLE POSITION BALL LINK | INSIDE ☐ | HOLE POSITION BALL LINK | INSIDE ☑ |
| | OUTSIDE ☑ | | OUTSIDE ☐ |

## FLEX

ULTRAFLEX ☐

TOPDECK ☑

SCREW`S ASSEMBLED ☑

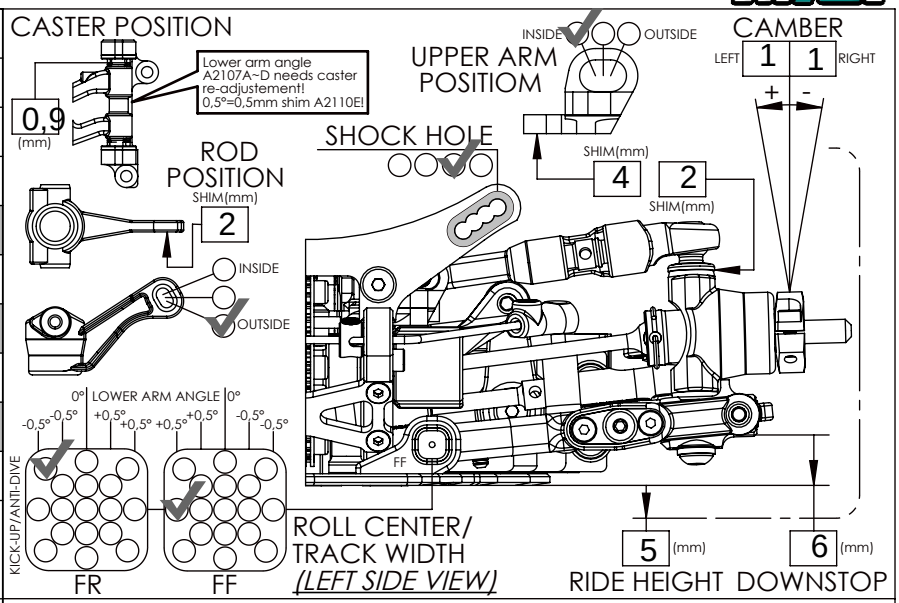


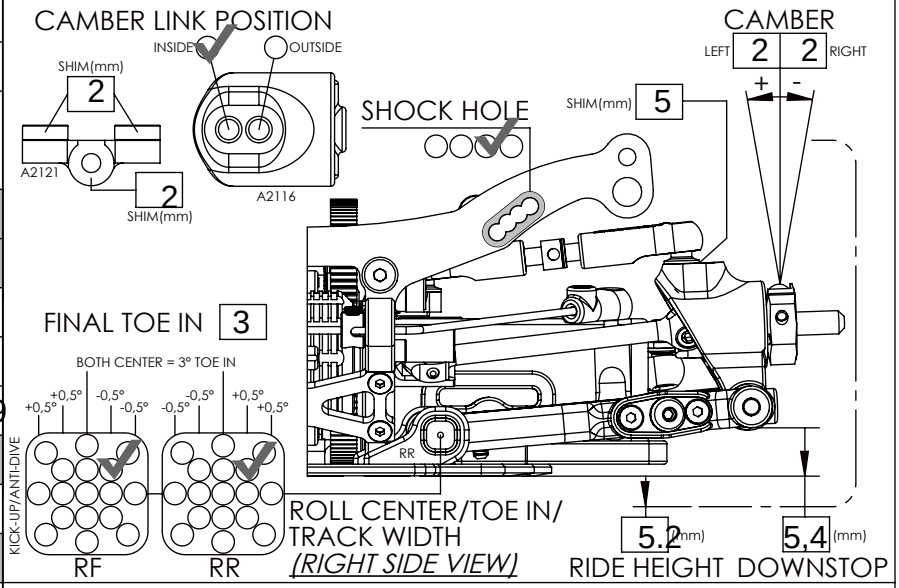


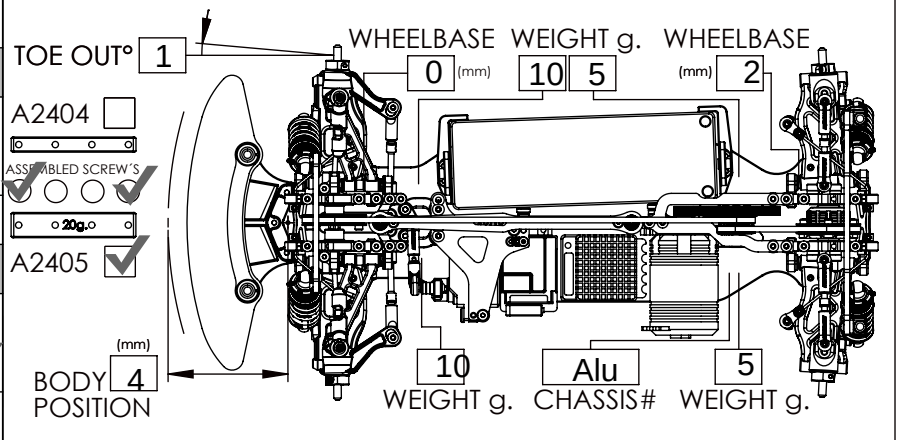


STEERING SHAFT MOUNTED ON ☑ SERVOPLATE ☑ CHASSIS

STEERING STOPPER ◯ ☐ ∅5 ☐ ∅5,5 ☑ ∅6

WING TYPE std

PF Type-S PL

BODY TYPE ☐ OVERHANG(mm)

NOTES:

- A2121 upside down
- 2mm front casterclip replaced through 2mm o-ring
- bushing in topdeck-servo mount