TF7.7 2 BELT DRIVE 4WD SETUP SHEET

KYOSHO THE FINEST RADIO CONTROL MODELS

Name : _____ Date : _____ Track/City : _____ Event : _____

Front Suspension

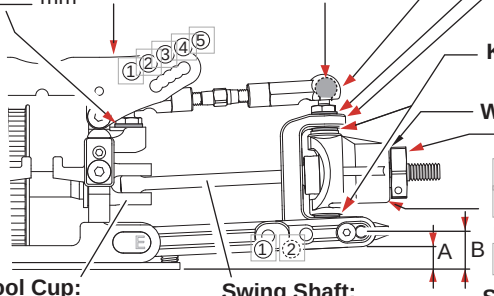

Upper Spacer : ☐ ☐ _____ mm

Shock Tower: ☐ TFW172 (Std) ☐ _____

King Pin: ☐ 97040 (Low) ☐ UM129 (Std)

Upper End: ☐ UM112H (Std) ☐ UM112

Upper Spacer: _____ mm

Hub Carrier: ☐ 4° (TF225H/Std) ☐ 6° (TF225-6H) ☐ _____

Knuckle Spacer: ☐ Upper ☐ Lower

Wheel Spacer: _____ mm

Knuckle : ☐ TF243 (TF7/Std) ☐ TF237 (TF6SP)

Drive Hub : ☐ TFW113 (4.0/Std) ☐ LAW30R (4.5) ☐ TFW031 (5.2)

Droop : ☐ A ☐ B _____ mm

Upper Rod Position: ☐ ☐

ST Servo Horn: ☐ Plastic(IF435/Std.) ☐ Aluminum (IFW448/F) (IFW449/S/K)

Sus. Arm Spacer: Front : _____ mm Rear : _____ mm

Crank Bridge: ☐ Use ☐ No Use

Knuckle Spacer: _____ mm

Diff. Position: ☐ ☐

Ride Height: _____ mm

Spool Cup: ☐ TFW124 (Alu.) ☐ TF287 (Steel/Std)

Swing Shaft: ☐ TF272 (Std/TFW121) ☐ TFW122 (40.5mm)

Sus Arm: ☐ TF268-01B (L) ☐ TF279-01 (M/Std) ☐ TF280 (S)

Sus.Holder Type: ☐ TF212 (Separates/Std) ☐ TFW120 (Onepiece)

Sway Bar Holder: ☐ Plastic(TF269/Std./Cut) ☐ Plastic (TF269/Std./No Cut) ☐ Aluminum (TFW110)

Camber Angle: _____ °

Toe Angle: ☐ In ☐ Out _____ °

Sus.Holder Bushing: Front ☐ In / Out _____ _____ mm Rear ☐ In / Out _____ _____ mm

Sus. Holder Spacer:

Sway Bar: _____ mm

Front Diff: ☐ Spool ☐ C-joint ☐ Pin ☐ One Way ☐ Gear Diff(Oil:#_____) (Oil Weight:_____g)

Rear Suspension

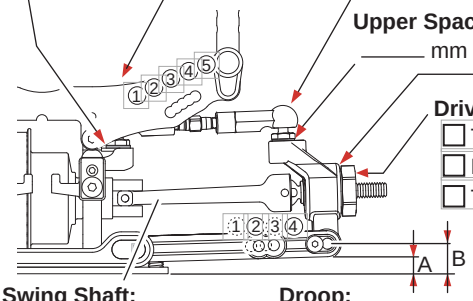

Upper Spacer : _____ mm

Shock Tower: ☐ TFW173 (Std) ☐ _____

Upper End: ☐ UM112H (Std) ☐ UM112

Upper Rod Position: ☐ ☐

Upper Spacer: _____ mm

Wheel Spacer: _____ mm

Drive Hub: ☐ TFW113 (4.0/Std) ☐ LAW30R (4.5) ☐ TFW031 (5.2)

A.R.T.S.: Spacer / Outside: _____ mm

Hub Carrier: ☐ 0° (TF225-0H) ☐ 4° (TF225H)

Sus. Holder : ☐ TF266(Std) ☐ TF131

Spacer / Inside : _____ mm

Diff Position: ☐ ☐

Sus Arm Spacer: Front _____ mm Rear _____ mm

Motor Height : ☐ Up ☐ Low

Ride Height: _____ mm

Swing Shaft: ☐ TFW032-01B (46) ☐ TF007-01 (43)

Droop: ☐ A ☐ B _____ mm

Sus. Arm: ☐ TF268-02 (L/Std.) ☐ TF279-02 (M) ☐ TF280 (S)

Sus.Holder Type (F): ☐ TF286 (Separates/std.) ☐ TF212 (Separates) ☐ TFW120 (Onepiece)

Sway Bar Holder: ☐ Plastic (TF269/Std./Cut) ☐ Plastic (TF269/Std./No Cut) ☐ Aluminum (TFW110)

Camber Angle: _____ °

Toe Angle: _____ °

Sway Bar: _____ mm

Rear Diff: ☐ Gear Diff(Oil:#_____) (Oil Weight:_____g) ☐ Ball Diff

Sus.Holder Bushing: Front ☐ In / Out _____ _____ mm Rear ☐ In / Out _____ _____ mm

Sus Holder Spacer:

Shock

	Front	Rear
Piston :	_____	_____
Oil :	_____	_____
Spring :	_____	_____
Diaphragm :	_____	_____
Pressure Form :	_____	_____
Lengh :	_____ mm	_____ mm
Outer Spacer :	_____ mm	_____ mm
Shock Type :	☐ W5307R (Std.)	☐ _____

☐ Hole _____ mm

Ackermann

Steering Spacer: _____ mm

Chassis

Top Deck Screw: ☐ Steel(Std.) ☐ Titanium ☐ Aluminum

Front Rear

Weight: _____ g

Chassis Screws:

Battery Position: ☐ Front ☐ Rear

Weight: _____ g

Weight: _____ g

Weight: _____ g

Weight: _____ g

Chassis: ☐ Carbon (TF281/Std) ☐ Aluminum (TFW177R/TFW177BK)

Center Stiffner: ☐ Use ☐ No Use

Belt Tensioner: ☐ TFW174

Tires & Wheels

Tire _____

Insert _____

Wheel _____

Additive 1st : _____ 2nd : _____

Others

2nd Gear Ratio : 1.90

Motor _____

Pinion/Spur _____ / _____ Gear Ratio _____

Battery _____ ESC _____

Body _____ Wing _____

Track Condition

☐ Smooth ☐ Bumpy ☐ Low Traction ☐ Med Traction ☐ High Traction

☐ Asphalt ☐ Concrete ☐ Carpet ☐ Indoor ☐ Outdoor

Comments