AWESOMATIX A800FX — SETUP SHEET

NAME	Steven M. Olsen	DATE	25-27/10-19
COUNTRY	Denmark	TEMP. °C AIR / TRACK	22 / 22
RACE	ETS R1 Vienna	ASPHALT	☐ OUTDOOR ☐ INDOOR ☑ CARPET ☑
TRACK	ETS R1 Vienna	TRACK CONDITION	TECHNICAL ☐ MIXED ☑ FAST ☑
		TRACTION	LOW ☐ MEDIUM ☑ HIGH ☐

FRONT

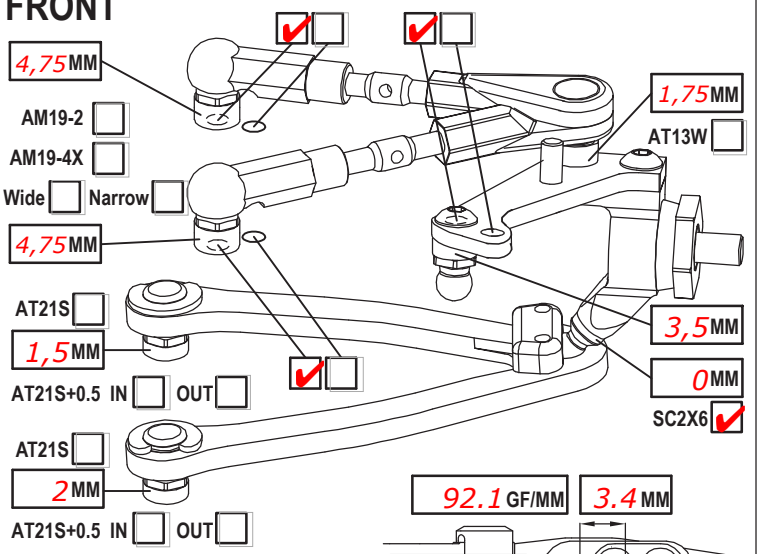

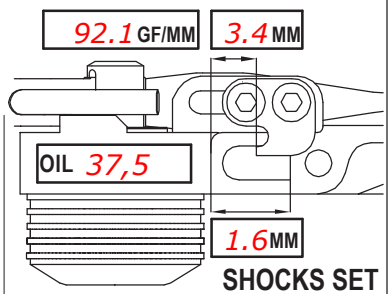

SHOCKS SET

CAMBER ANGLE / °	1
CASTER ANGLE / °	4
TOE ANGLE / °	1
RIDE HEIGHT / MM	5,2
DOWNSTOP / MM	5,8
UPWNSTOP / MM	-
STABILIZER Ø / MM	1,0
LOW ARM C04M1+9.0	☑ ☐
STEER. ARM AM14FX	☑ ☐
WHEEL SPACER / MM	

ROTOR	STD ☑	☐
SPRING	STD ☑	S ☐
DAMPER	D2.2 ☐	☐
SRS/RHS ARR.	I ☑	II ☐
PSS SETUP	MM 25% ☐	15% ☐

FRONT DRIVE SPOOL ☐ GB2B ☑ LOW ☐ HIGH ☐

DIFF. OIL 300.000 | DIFF WASHERS std.

WHEELHUB AM06WL ☑ ☐

REAR

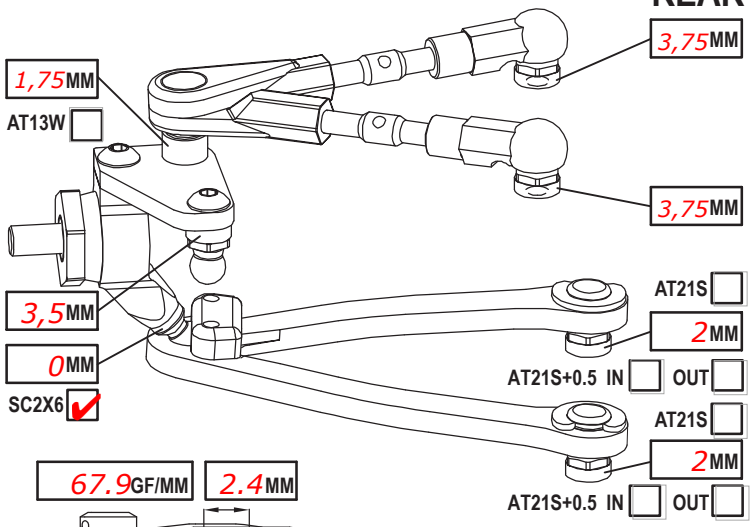

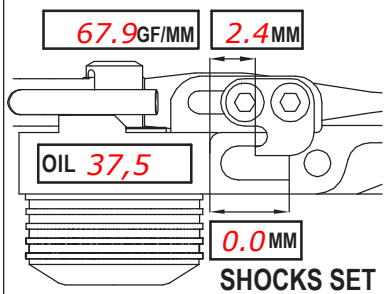

SHOCKS SET

CAMBER ANGLE / °	0
CASTER ANGLE / °	0
TOE ANGLE / °	1,5
RIDE HEIGHT / MM	5,4
DOWNSTOP / MM	4,6
UPWNSTOP / MM	-
STABILIZER Ø / MM	1,1
LOW ARM C04M1+8.0	☐ ☐
STEER. ARM AM23-1	☐ ☐
WHEEL SPACER / MM	0

ROTOR	STD ☑	☐
SPRING	STD ☐	S ☑
DAMPER	D2.2 ☑	☐
SRS/RHS ARR.	I ☑	II ☐
PSS SETUP	MM 25% ☐	15% ☐

WHEELHUB AM06WL ☑ ☐

CHASSIS FLEX AND WEIGHT SETTINGS

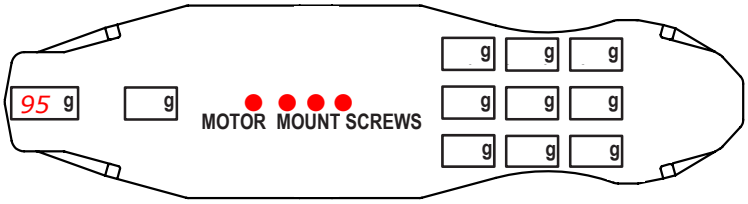

LOWER DECK C01B-FXC ☐ C01B-FXA ☑

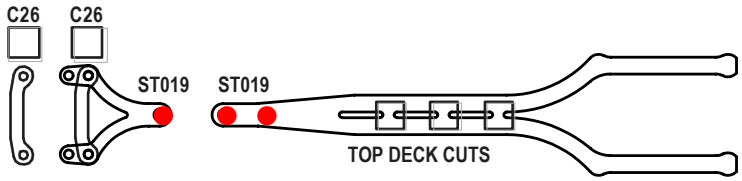

TOP DECK C27FX ☑

TIRES	Ride
INSERTS	-
WHEELS	-
ADDITIVE	MR33 V4
TIME - FR	20
RR	20
TOTAL WEIGHT	1257
WEIGHT DISTRIBUTION	F % R %

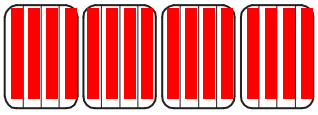

NOTES: balance point 91,5mm behind front axle

MOTOR LATERAL SHIFT / MM	0	ACKERMANN SHIMS / MM	0
MOTOR	HW 17.5	SERVO	-
SPUR 100 PINION 38 RATIO	5.00	STEER TRAVEL IN OUT	MAX
BODY	Bitty HR-F	BATTERY	LRP 5800
WING	cut straight with the highest cutting line	RECEIVER	Sanwa 482
ESC	HW	RADIO	Sanwa M17
ESC SETTING	-		
BEST LAPTIME	16,434	QUALIF./FINAL POSITION	1 / 2

Upstop limiter cut off.