AWESOMATIX A800FX

SETUP SHEET

NAME	Max Mächler	DATE	29.09.2019
COUNTRY	Germany	TEMP. °C AIR / TRACK	/
RACE	Test Indoor (ETS spec)	ASPHALT	☐ OUTDOOR ☐ INDOOR ☑ CARPET ☑
TRACK	Arena33	TRACK CONDITION	TECHNICAL ☑ MIXED ☑ FAST ☑
		TRACTION	LOW ☐ MEDIUM ☑ HIGH ☑

FRONT

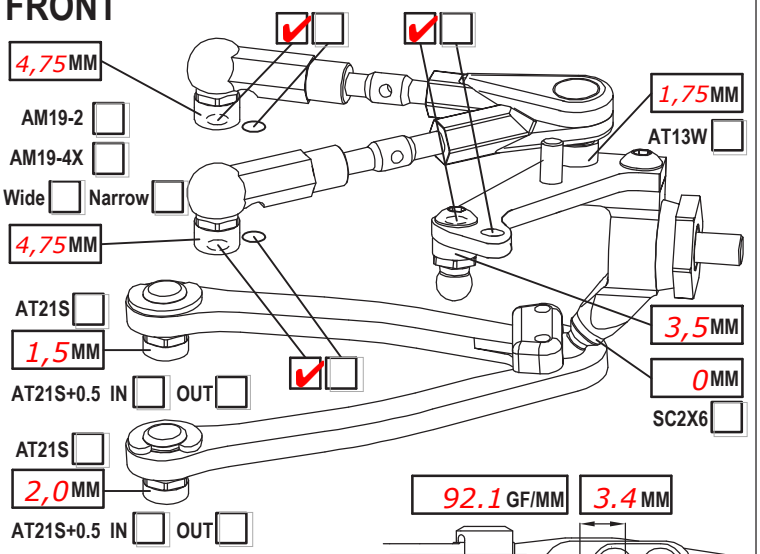

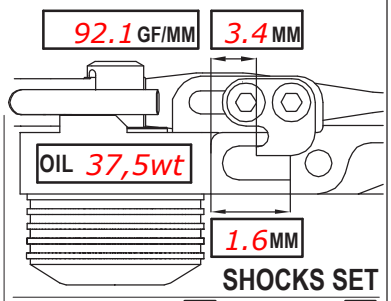

SHOCKS SET

CAMBER ANGLE / °	1
CASTER ANGLE / °	4,0
TOE ANGLE / °	1,0
RIDE HEIGHT / MM	5,2
DOWNSTOP / MM	5,8
UPWNSTOP / MM	-
STABILIZER Ø / MM	1,0
LOW ARM C04M1+9.0	☑ ☐
STEER. ARM AM14FX	☑ ☐
WHEEL SPACER / MM	0

ROTOR	STD ☑	☐
SPRING	STD ☑	S ☐
DAMPER	D2.2 ☑	☐
SRS/RHS ARR.	I ☑	II ☐
PSS SETUP	MM 25% ☐	15% ☐

FRONT DRIVE SPOOL ☐ GB2B ☑ LOW ☑ HIGH ☐

DIFF. OIL 300.000 | DIFF WASHERS std.

WHEELHUB AM06WL ☑ ☐

REAR

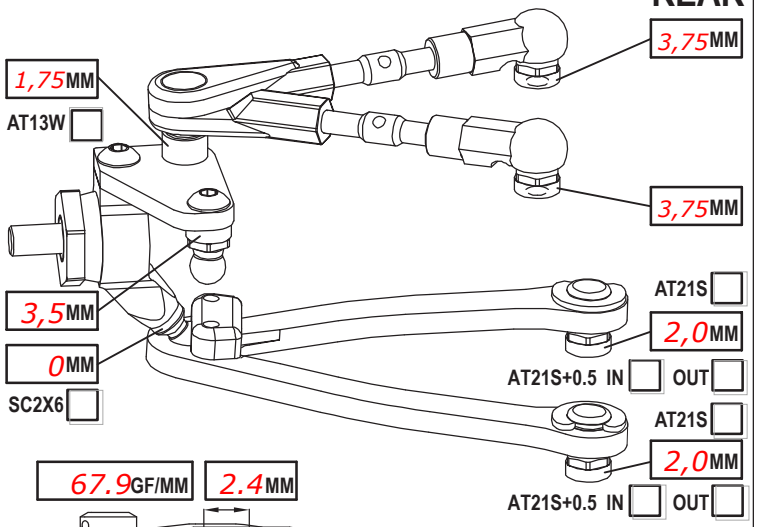

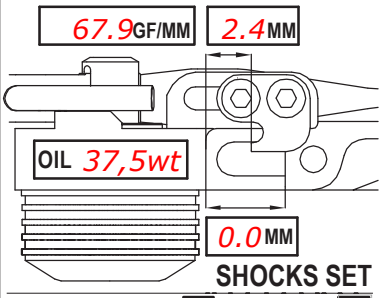

SHOCKS SET

CAMBER ANGLE / °	0
CASTER ANGLE / °	0
TOE ANGLE / °	1,5
RIDE HEIGHT / MM	5,4
DOWNSTOP / MM	4,6
UPWNSTOP / MM	-
STABILIZER Ø / MM	1,1
LOW ARM C04M1+8.0	☑ ☐
STEER. ARM AM23-1	☑ ☐
WHEEL SPACER / MM	0

ROTOR	STD ☑	☐
SPRING	STD ☐	S ☑
DAMPER	D2.2 ☑	☐
SRS/RHS ARR.	I ☑	II ☐
PSS SETUP	MM 25% ☐	15% ☐

WHEELHUB AM06WL ☑ ☐

CHASSIS FLEX AND WEIGHT SETTINGS

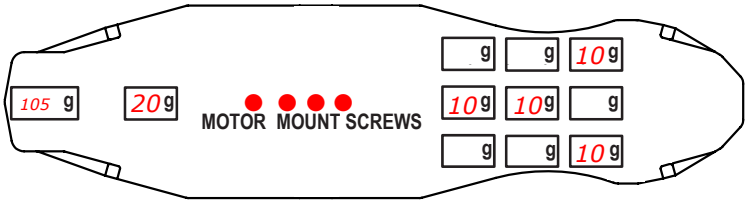

LOWER DECK C01B-FXC ☐ C01B-FXA ☑

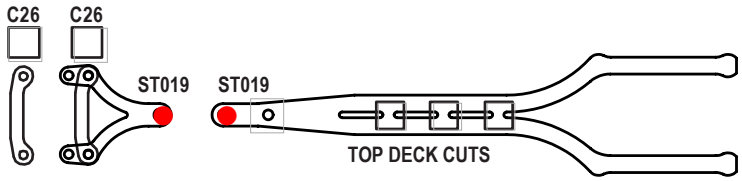

TOP DECK C27FX ☑

TIRES	RIDE RI-26072		
INSERTS			
WHEELS			
ADDITIVE	MR33 V4	TIME - FR 15	RR 15
TOTAL WEIGHT	1250g.	WEIGHT DISTRIBUTION F 65 %	R 35 %

NOTES:

MOTOR LATERAL SHIFT / MM 0	ACKERMANN SHIMS / MM 0
MOTOR HW 17,5T	SERVO MKS HBL 575SL
SPUR 1 PINION 1 RATIO 1.90	STEER TRAVEL IN 23 OUT
BODY PF EUROPA	BATTERY Sunpadow 4500 Gold Series
WING Std.	RECEIVER Sanwa 491
ESC HW Stock	RADIO Sanwa M17
ESC SETTING	
BEST LAPTIME	QUALIF./FINAL POSITION /

INFO: Top nose/upstop limiter of P12X Swaybar holder cutted to give space for suspension arm moving with higher lower rollcenters.