A800

SETUP SHEET

Alterations by Arn0 at PetitRC.com

NAME	Michael Hanulec	DATE	31 Aug 2016
COUNTRY	USA	TEMP.°C AIR / TRACK	90°F / 100°F
RACE	Wednesday Night Worlds		
TRACK	360 V2		

		CARPET ✔	ASPHALT ☐
TRACK CONDITION	TECHNICAL ✔	MIXED ✔	FAST ☐
TRACTION	LOW ☐	MEDIUM ✔	HIGH ☐

FRONT

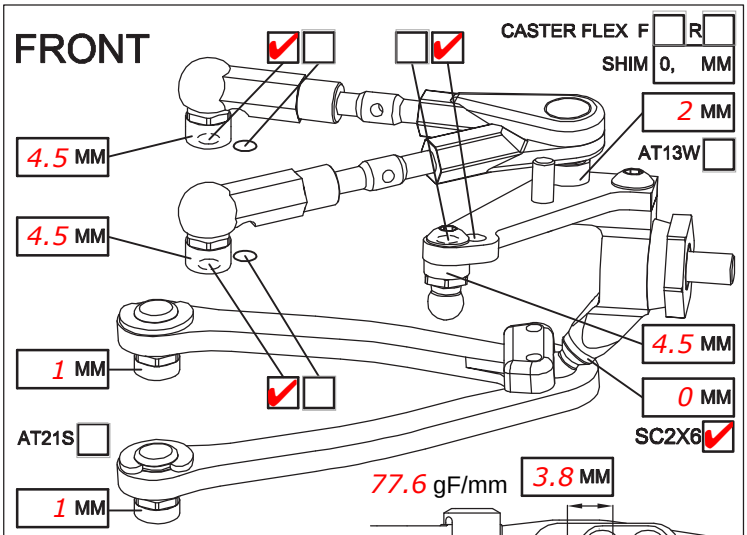

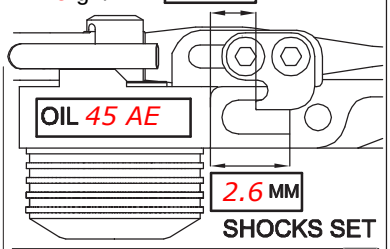

SHOCKS SET

CAMBER ANGLE / °	1.24	ROTOR	STD ✔	☐
CASTER ANGLE / °	4	SPRING	STD ☐	S ✔
TOE ANGLE / °	0	DAMPER	D2.1 ✔	☐
RIDE HEIGHT / MM	5	ACTION	SYM. ☐	ASYM. ☐
DOWNSTOP / MM	1 orh	SRS/RHS ARR.	I ✔	II ☐
UPSTOP / MM	15			
STABILIZER Ø / MM	1.2			
LOW ARM	C04AL ✔ ☐			
STEERING ARM	STD ✔ ☐			
WHEEL SPACER / MM				

FRONT DRIVE	☐	GD3 ☐	SPOOL ✔	GD2B ☐
DIFF OIL		DIFF WASHERS		
DOGBONE DRIVE	ST17-1 ☐	ST11 ✔	ST12 ☐	BB ☐	ST02 ☐

REAR

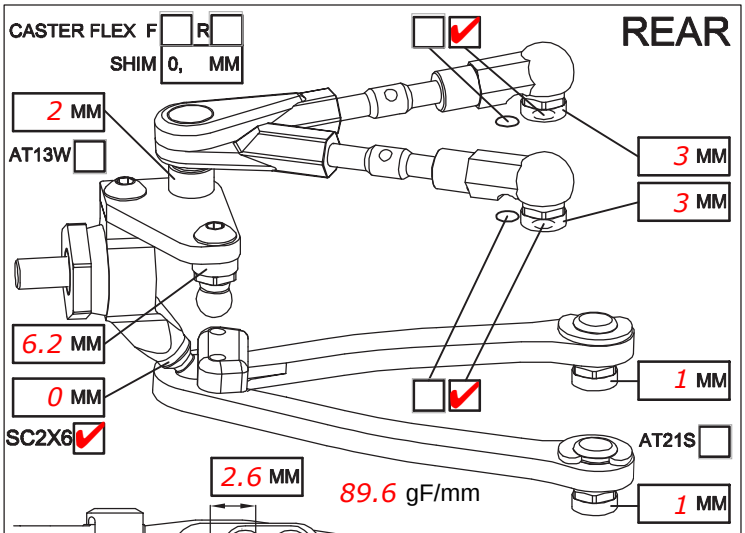

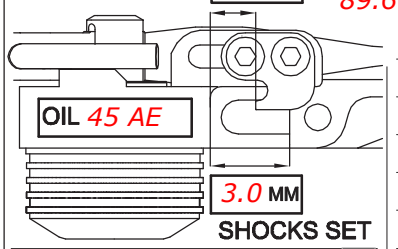

SHOCKS SET

CAMBER ANGLE / °	2	ROTOR	STD ✔	☐
CASTER ANGLE / °	+4 long	SPRING	STD ☐	S ✔
TOE ANGLE / °	3	DAMPER	D2.1 ✔	☐
RIDE HEIGHT / MM	5.75	ACTION	SYM. ☐	ASYM. ☐
DOWNSTOP / MM	2.5 orh	SRS/RHS ARR.	I ✔	II ☐
UPSTOP / MM	15			
STABILIZER Ø / MM	1.2			
LOW ARM	C04AL ✔ ☐			
STEERING ARM	STD ✔ ☐			
WHEEL SPACER / MM				

REAR DRIVE	☐	GD3R ☐	GD2B ✔		
DIFF OIL	10k AE	DIFF WASHERS			
DOGBONE DRIVE	ST11 ✔	ST12 ☐	BB ☐	ST17-1 ☐	EVD ☐

FRAME FLEX SETTING

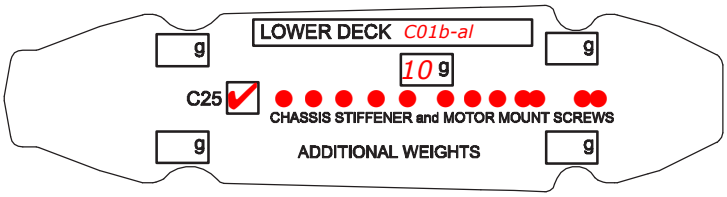

CHASSIS STIFFENER AM110 ☐ AM115 ✔ ST130 ☐

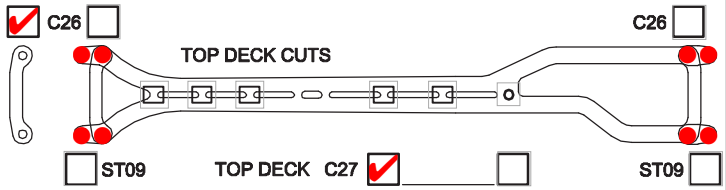

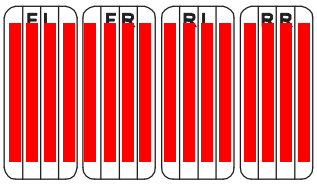

TIRES	FRONT	REAR
BRAND	Jaco	Blue
INSERTS	Premount	
WHEELS		
ADDITIVE	Sxt3	

MOTOR LATERAL SHIFT / MM	0	MOTOR	R1 v11 17.5
ACKERMANN SHIMS / MM	2	SERVO	Amtx
DRIVE RATIO		ESC	LRP Flow Works
SPUR 95	PINION Lol	BATTERY	R1 7600
BODY	Mon-Tech Nazda2	RECEIVER	Sanwa
WING	Nazda2		

BEST LAPTIME	14.7	QUALIF. / FINAL POSITION	1 / Q
ESC SETTING	Blinky		

COMMENTS

Glued front tire sidewalls
Front diff low
Rear diff middle

COMMENTS / IMPRESSIONS

June 2016 car - D2.2, AM06W, AM14-3, wide
C01B-AL, Hiro Seiko screw set,
F5043 BSR bumper, WTF3416,
WTF Mad Max Fan Mount

CONTACT Info@awesomatixusa.com