RIO 2015 SET-UP SHEET

1/10 190mm Electric Touring Car.

ARC

RACE	Longwy Winterseries Round 1
TRACK	ETS Carpet
NAME	Marc Schmitt
CITY / COUNTRY	
DATE	15.11.2015

TEMPERATURE	AIR 20	TRACK 20

QUALIFYING POSITION	BEST LAPTIME	FINAL POSITION	RACE LENGTH
19	10.7 SEC	17	5 MIN

TRACK CONDITION: ☐ TECHNICAL ☑ CARPET ☐ MIXED ☐ ASPHALT ☐ FAST

TRACTION: ☐ LOW ☐ MEDIUM ☑ HIGH

TRANSMISSION

FRONT GEAR DIFF	REAR GEAR DIFF
☐ CST	☐ 5000 CST

☐ ONE WAY ☑ SPOOL

Number of Gears: ☐ 2 ☑ 4

MOTOR	Orca 5.5	ESC	Orca
PINION	64 DP / 1 T	SPUR GEAR	64 DP / 112 T
FINAL DRIVE RATIO (Internal Ratio: 2.0)	224.00		

FRONT OIL	FRONT SPRING	SHOCK PISTON	REAR SPRING	REAR OIL
400 CST	ARC Blue	☐ 3 HOLE ☑ 4 HOLE	ARC Blue	450 CST

HOLE SIZE: 1.1 mm / mm

Volante	TIRES	Volante
	RIM	
	INSERTS	
Hudy	ADDITIVE	Hudy

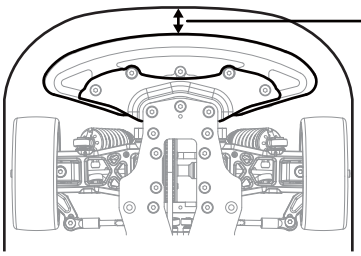

Bumper: ☐ Standard ☑ Cut

BODY MOUNT DISTANCE: 5 mm

BODY	Speed 6 LW	WING	MR33 V2

NOTE *Alteration by Arn0 at PetitRC.com*
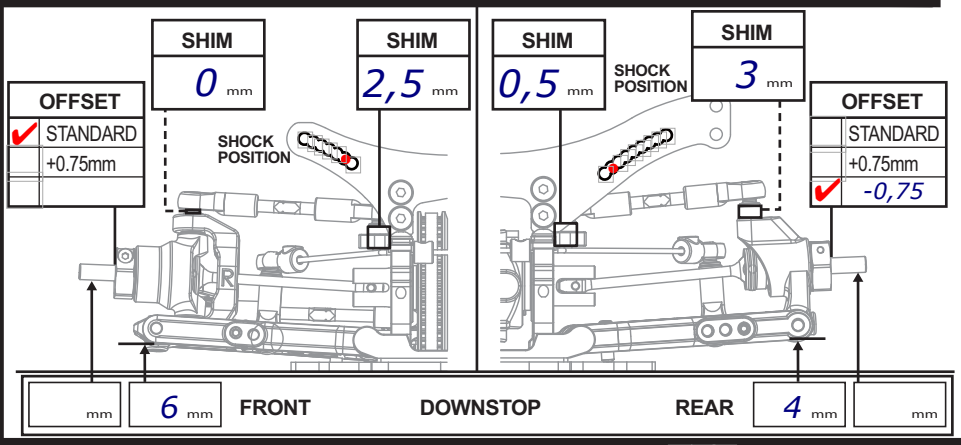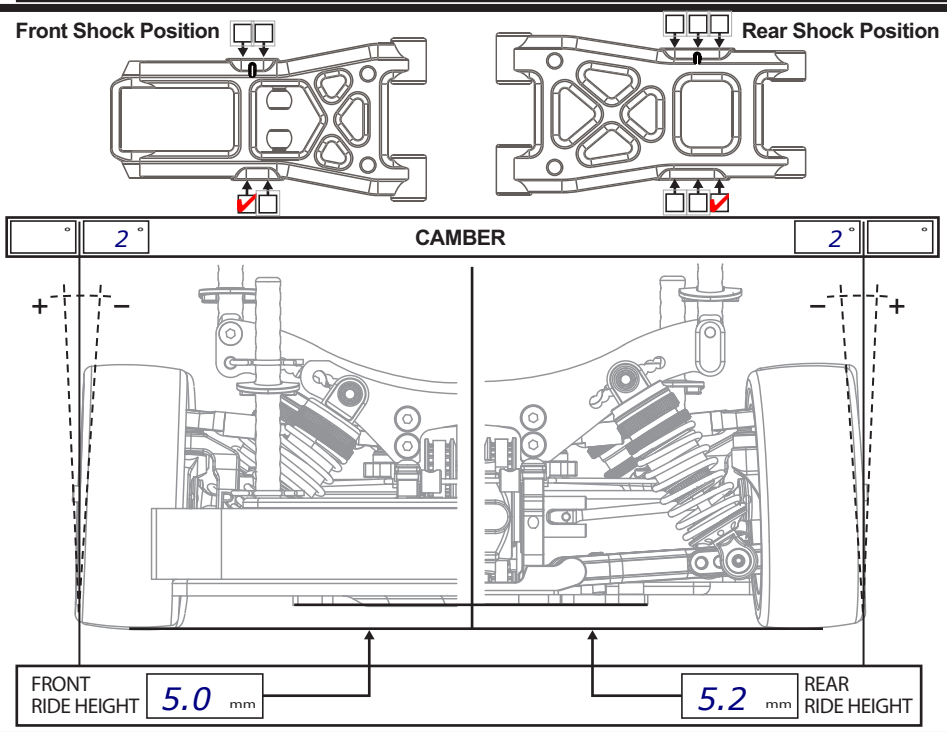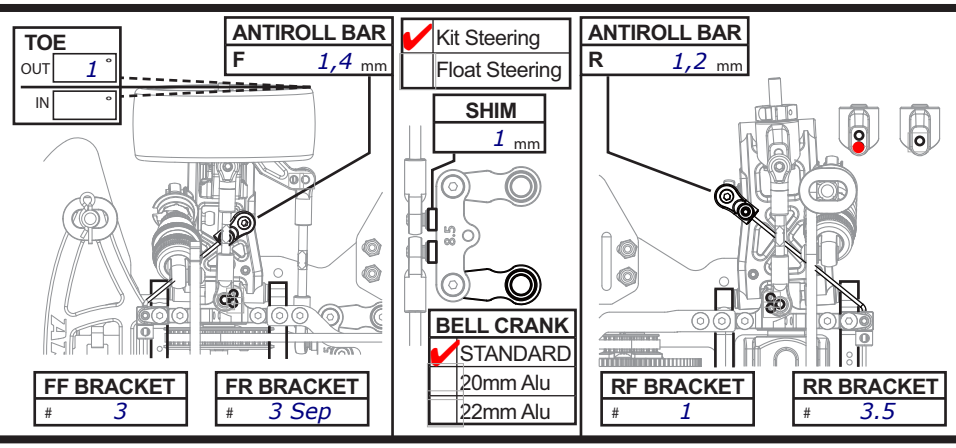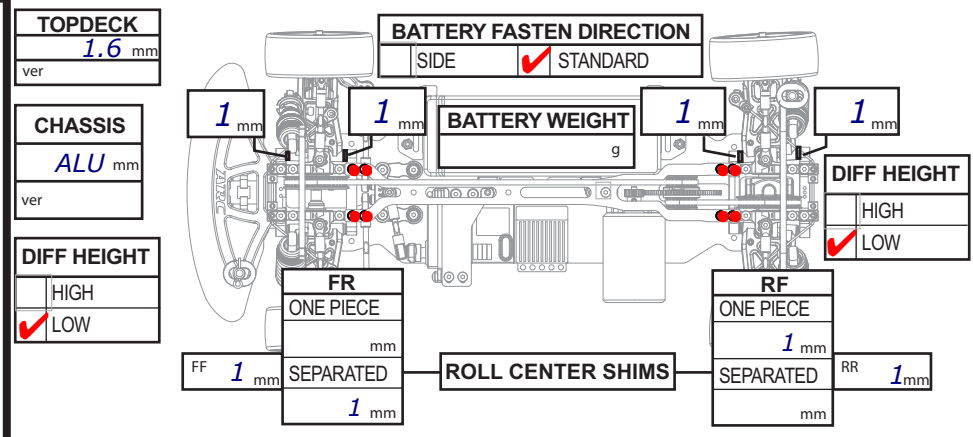
Additive Time Rear 15min Front 5min
Use Muchmore Oils
20G weight in Front 10g in Rear
Flip Steering Arms 180
Bumpsteer 2mm
Hard C Hubs
Hard Arms Rear