RIO 2015 ATS ACTIVE TOE SYSTEM SET-UP SHEET ARC

1/10 190mm Electric Touring Car

RACE	ETS RND 6
TRACK	HUDY ARENA
NAME	HELGE JOHANNESSEN
CITY / COUNTRY	
DATE	

TEMPERATURE	AIR	TRACK

QUALIFYING POSITION	BEST LAPTIME	FINAL POSITION	RACE LENGTH
4	SEC	9	MIN

TRACK CONDITION: [ ] TECHNICAL [ ] CARPET [✓] MIXED [ ] ASPHALT [ ] FAST

TRACTION: [ ] LOW [ ] MEDIUM [✓] HIGH

TRANSMISSION

FRONT	REAR
GEAR DIFF [ ] CST	GEAR DIFF [✓] 5000 CST
[ ] ONE WAY	Number of Gears [ ] 2 [✓] 4
[✓] SPOOL	ASSOIL

MOTOR	MM	ESC	MM
PINION	64 DP / 40 T	SPUR GEAR	64 DP / 90 T
FINAL DRIVE RATIO (Internal Ratio: 2.0)	4.50		

FRONT		REAR
OIL 30 CST	[✓] 3 HOLE [ ] 4 HOLE	OIL 32,5 CST
SPRING ARC YELLOW	SHOCK PISTON	SPRING ARC YELLOW

HOLE SIZE	
[✓]	1.1 mm
[ ]	mm

RIDE	TIRES	RIDE
	RIM	
	INSERTS	
	ADDITIVE	

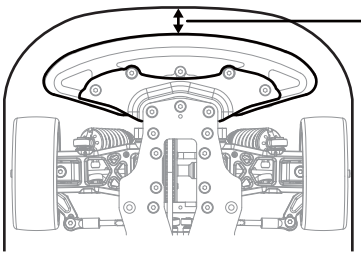

Bumper	
[ ]	Standard
[✓]	Cut

BODY MOUNT DISTANCE: FORWARD 5MM mm

BODY	BLITZ GSX 0,5	WING	BLITZ GSX 0,5

ATS SETUP

ATS Upright Shims: mm

ATS Base Shims: mm

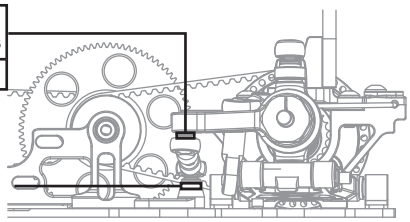

NOTE

Alteration by Arn0 at PetitRC.com

DJ CVC FRONT&REAR
LF BELT & PULLEYS
LF BALLJOINTS
SOFT WISHBONES!!!
ASSOCIATED OIL IN DAMPERS

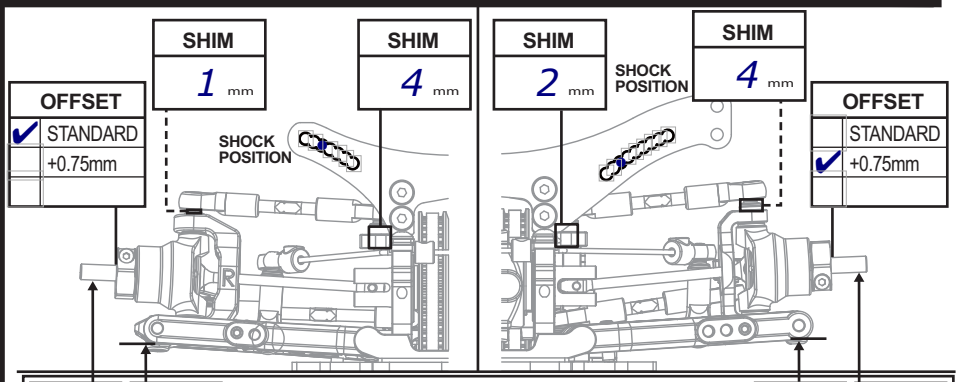

mm	5,2 mm	FRONT	DOWNSTOP	REAR	4,2 mm	mm

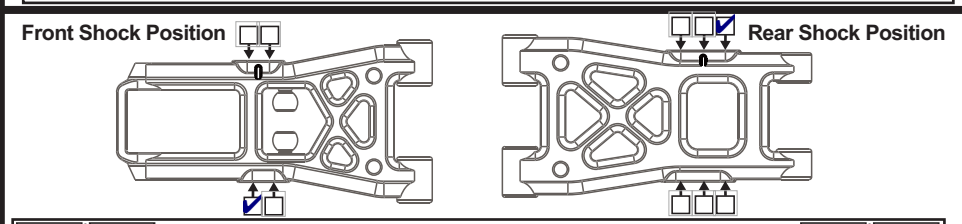

°	2,5 °	CAMBER	1,5 °	°

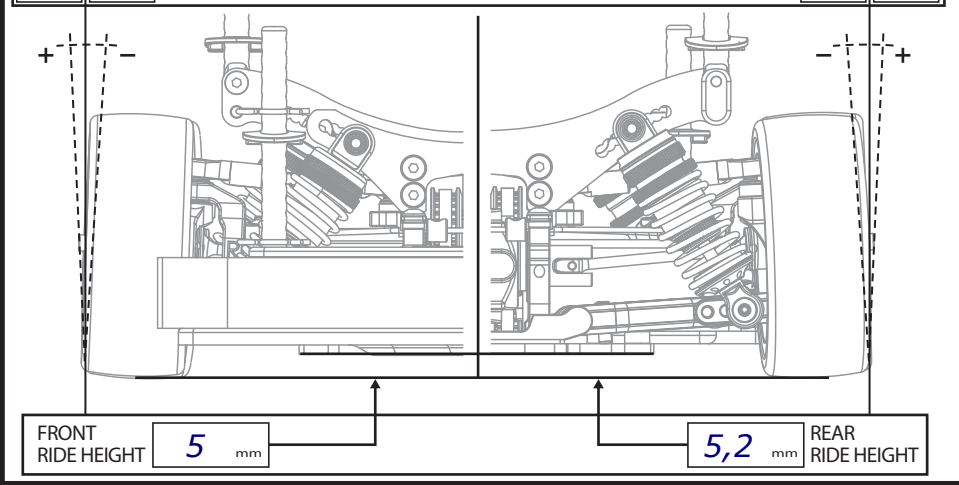
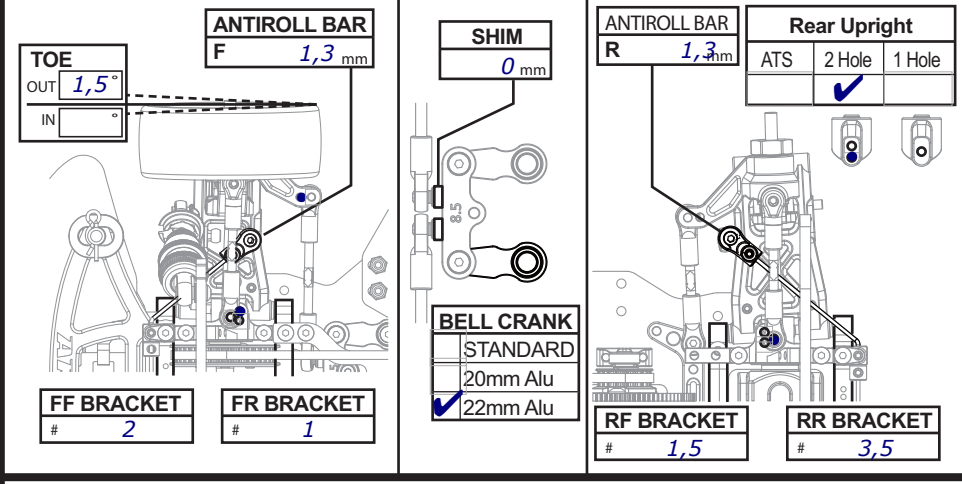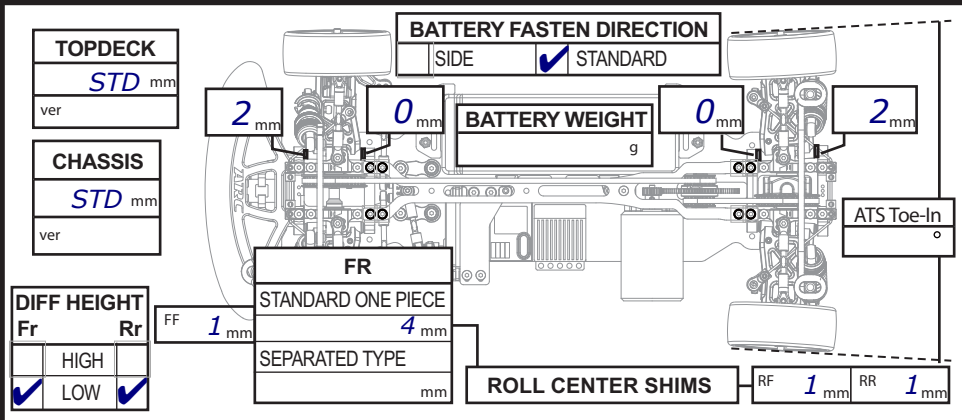
FRONT RIDE HEIGHT	5 mm	5,2 mm	REAR RIDE HEIGHT