R10 2013 SET-UP SHEET

1/10 190mm Electric Touring Car.

ARC

RACE	ETS RND 2
TRACK	Mulheim
NAME	Helge Johannessen
CITY / COUNTRY	
DATE	20150208

TEMPERATURE	AIR	TRACK

QUALIFYING POSITION	BEST LAPTIME	FINAL POSITION	RACE LENGTH
6	SEC	5	MIN

TRACK CONDITION: [ ] TECHNICAL [x] CARPET [x] MIXED [ ] ASPHALT [x] FAST

TRACTION: [ ] LOW [x] MEDIUM [ ] HIGH

TRANSMISSION

FRONT GEAR DIFF	REAR GEAR DIFF
[ ] CST	[ ] 3000 CST

[ ] ONE WAY
[x] SPOOL

Number of Gears: [ ] 2 [x] 4

MOTOR	MM 13,5 handout	ESC	MM handout
PINION	64 DP / 40 T	SPUR GEAR	64 DP / 100 T
FINAL DRIVE RATIO (Internal Ratio: 2.0)	5.00		

FRONT		REAR
OIL: 30 CST	SHOCK PISTON	OIL: 32,5 CST
[x] 3 HOLES [ ] 4 HOLES	HOLE SIZE: [x] 1.1 mm [ ] mm	[x] 3 HOLES [ ] 4 HOLES
SPRING: ARC Green		SPRING: ARC Green

	TIRES	
RIDE 30 handout		RIDE 30 handout
	RIM	
	INSERTS	
	ADDITIVE	

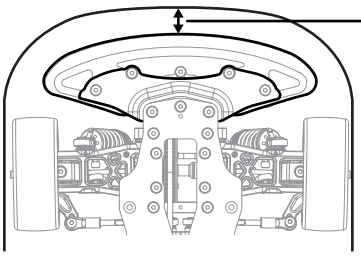

Bumper: [ ] Standard [x] Cut

BODY MOUNT DISTANCE: +5 mm

BODY	Blitz TSX	WING	TSX STD

NOTE *Alteration by Arn0 at PetitRC.com*

2015 ALU chassis
2015 ALU Bulkhead F/R
8,5 steeringbrace
DJ cvd front
Alu axle rear
Low Friction pulley set
Low Friction Belts F/R
Alu outdrives front
Alu and Ti screws
Hard wishbones front
Alu turnbuckles

Basically this is a hybrid of 2013 and 2015 car.
Worked close to perfect, easy to drive and fast :-)

Associated oil in dampers and differential.

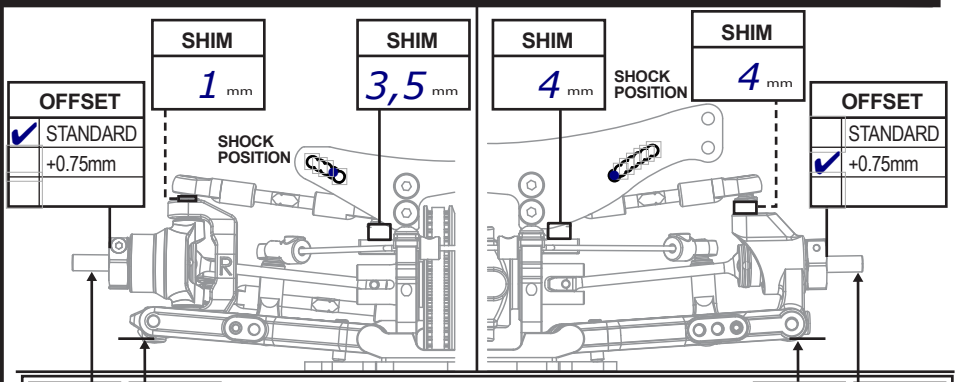

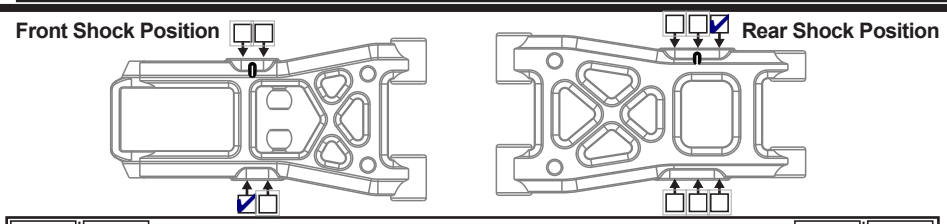

CAMBER: ° | 2 ° | 1,5 ° | °

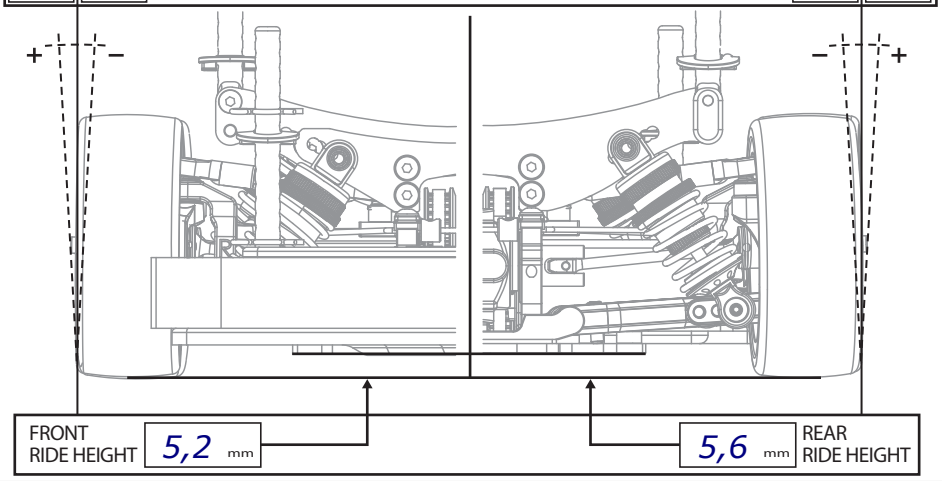

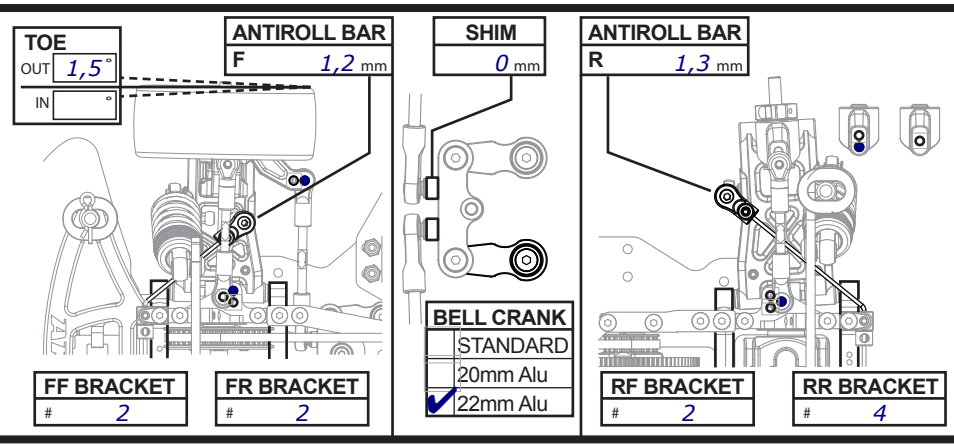

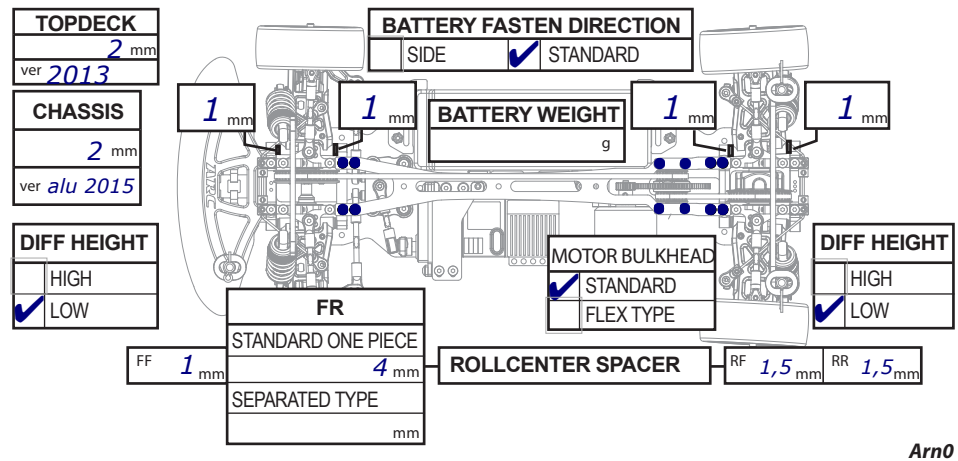

Arn0