R10 2013 SET-UP SHEET

1/10 190mm Electric Touring Car.

ARC

RACE	Maritime Practice Day
TRACK	Maritime Raceway
NAME	Terry Holmes
CITY / COUNTRY	
DATE	12th October 2013

TEMPERATURE	AIR	TRACK

QUALIFYING POSITION	BEST LAPTIME	FINAL POSITION	RACE LENGTH
	13.20 SEC		MIN

TRACK CONDITION: ☐ TECHNICAL ☑ CARPET ☑ MIXED ☐ ASPHALT ☐ FAST

TRACTION: ☐ LOW ☑ MEDIUM ☐ HIGH

TRANSMISSION

FRONT GEAR DIFF	REAR GEAR DIFF
☐ CST	☐ 2000 CST

☐ ONE WAY ☑ SPOOL

Number of Gears: ☐ 2 ☑ 4

MOTOR	Revtech Killshot HT/HT	ESC	Hobbywing V3
PINION	64 DP / 48 T	SPUR GEAR	64 DP / 86 T
FINAL DRIVE RATIO (Internal Ratio: 2.0)	3.58		

FRONT		REAR
OIL: 450 CST	☐ 3 HOLES ☑ 4 HOLES	OIL: 450 CST
SPRING: Green	SHOCK PISTON HOLE SIZE: 1.1 mm / mm	SPRING: Blue

Sorex 32	TIRES	Sorex 32
Revlite	RIM	Revlite
JB Blue	INSERTS	JB Blue
Spider Green	ADDITIVE	Spider Green

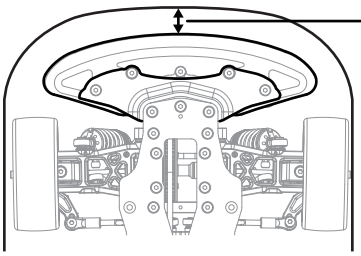

Bumper: ☑ Standard ☐ Cut

BODY MOUNT DISTANCE: mm

BODY	Titan Blitz TSX	WING	std

NOTE *Alteration by Arn0 at PetitRC.com*

Aluminium spool out drives & DJ CVD's

Shocks had about 2mm rebound.

Tyres warmed @ 45d for 15 mins and cleaned with Wurth brake cleaner.

The TSX shell was the best shell to use as it gave me better initial turn in than any other I tried. Car was very well balanced and could carry massive corner speed. This will be my base setup for carpet from now on.

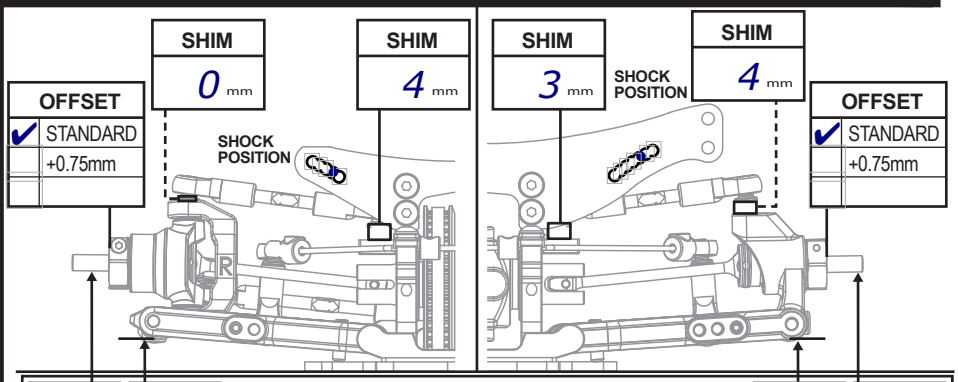

mm	6 mm	FRONT	DOWNSTOP	REAR	5.5 mm	mm

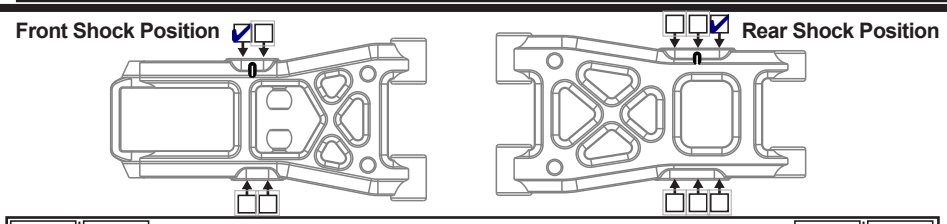

°	1.5°	CAMBER	2.0°	°

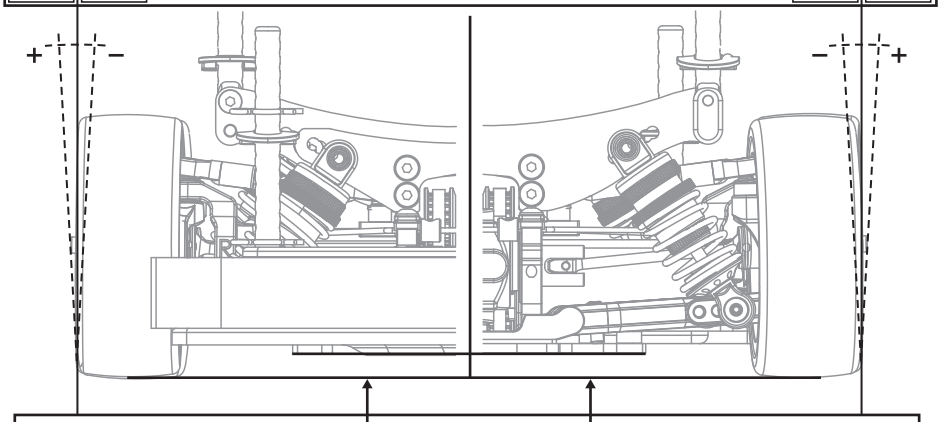

FRONT RIDE HEIGHT	5 mm	5 mm	REAR RIDE HEIGHT

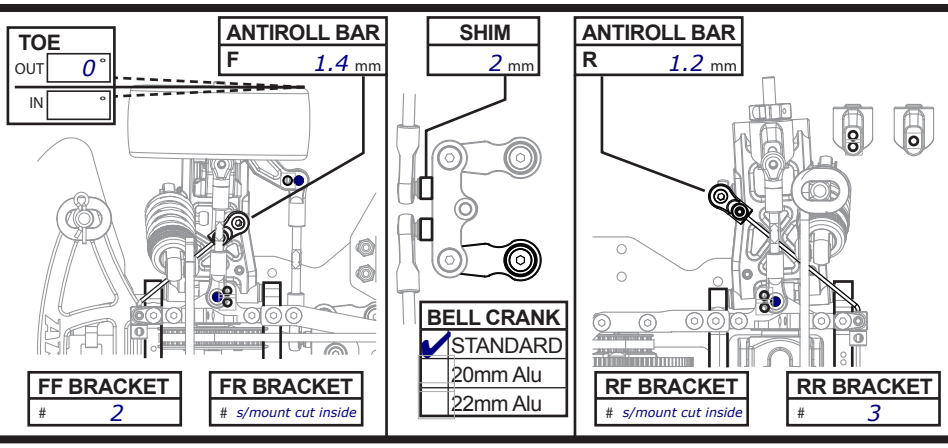

TOPDECK: mm, ver std

CHASSIS: mm, ver 2013

BATTERY FASTEN DIRECTION: ☑ SIDE ☐ STANDARD

BATTERY WEIGHT: g

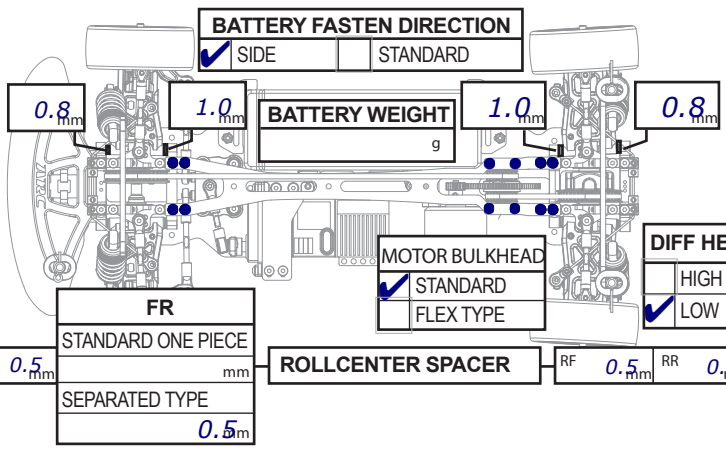

DIFF HEIGHT: ☐ HIGH ☑ LOW

DIFF HEIGHT: ☐ HIGH ☑ LOW

Arn0