R10 2013 SET-UP SHEET

1/10 190mm Electric Touring Car.

ARC

RACE	Round 1 of 2013/14 Rug Racers
TRACK	Wodson Liesure Centre
NAME	Malc Hall
CITY / COUNTRY	Ware UK
DATE	6/19/2013

TEMPERATURE	AIR	TRACK Rug Racers

QUALIFYING POSITION	BEST LAPTIME	FINAL POSITION	RACE LENGTH
Pole in the A	12.72 SEC	First	5 MIN

TRACK CONDITION: ☐ TECHNICAL ☑ CARPET ☑ MIXED ☐ ASPHALT ☐ FAST

TRACTION: ☐ LOW ☑ MEDIUM ☐ HIGH

TRANSMISSION

FRONT	REAR
GEAR DIFF	GEAR DIFF
☐ KIT CST	☑ 1000 CST
☐ ONE WAY	Number of Gears
☑ SPOOL	☐ 2 ☑ 4

MOTOR	Team Wave	ESC	BD
PINION	48 DP 39 T	SPUR GEAR	48 DP 70 T
FINAL DRIVE RATIO (Internal Ratio: 2.0)	3.58		

FRONT			REAR
OIL 500 CST	☑ 3 HOLES ☐ 4 HOLES	SHOCK PISTON	☑ 3 HOLES ☐ 4 HOLES	OIL 500 CST
SPRING green		HOLE SIZE ☑ 1.1 mm ☐ mm		SPRING blue

Sorex 32	TIRES	Sorex 32
Revlite	RIM	Revlite
JB Blue	INSERTS	JB Blue
Mootie/Spider Green	ADDITIVE	Mootie/Spider Green

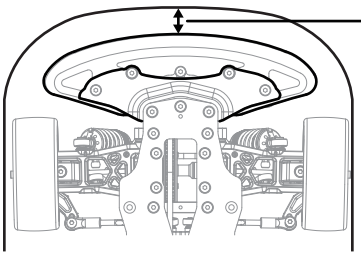

Bumper: ☑ Standard ☐ Cut

BODY MOUNT DISTANCE: Kit mm

BODY	Blitz B	WING	Nazda 4

NOTE *Alteration by Arn0 at PetitRC.com*

This is what I ended with at HRCC
I used the DJ's
Very stable and predictable, and loved being on power in the corners.
Cool Can Fans fitted, came of solid green on motor.

Tyre warmers at 50 degrees for 15 mins, wipe off additive prior to going out.

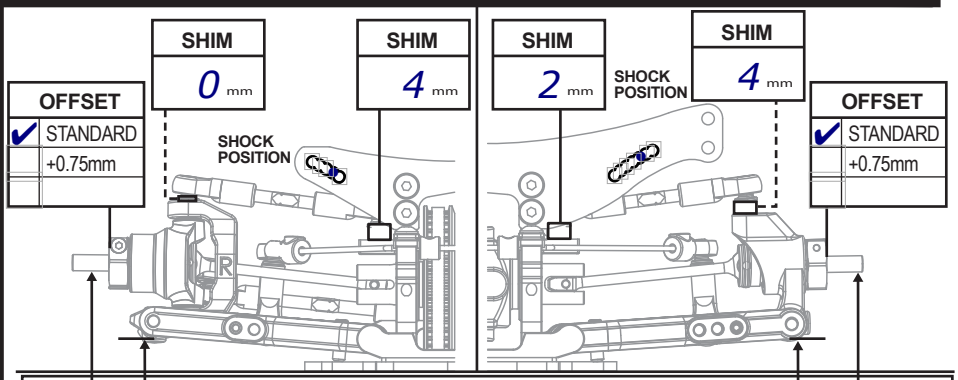

mm	6.5 mm	FRONT	DOWNSTOP	REAR	6.0 mm	mm

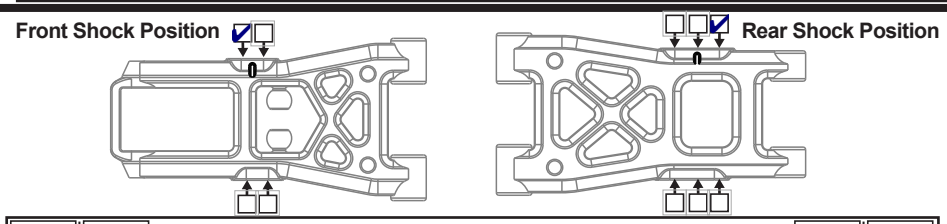

°	1.5°	CAMBER	2°	°

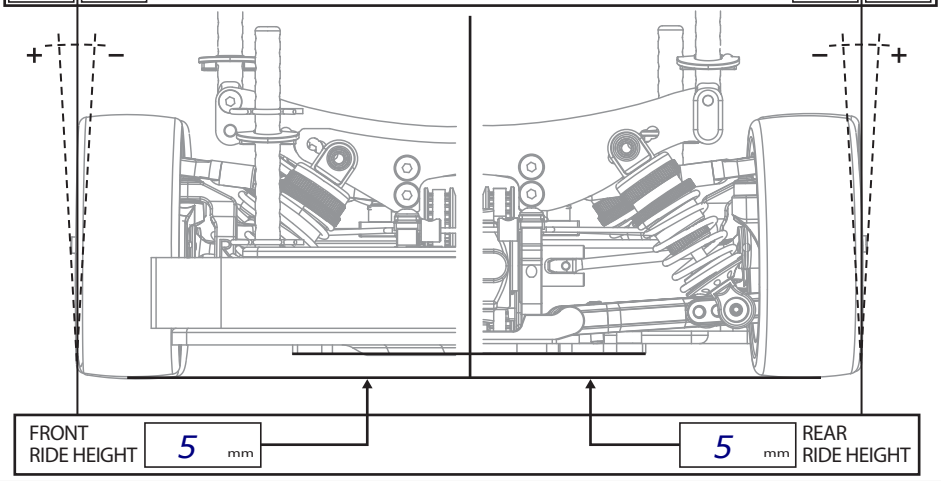

FRONT RIDE HEIGHT 5 mm | 5 mm REAR RIDE HEIGHT

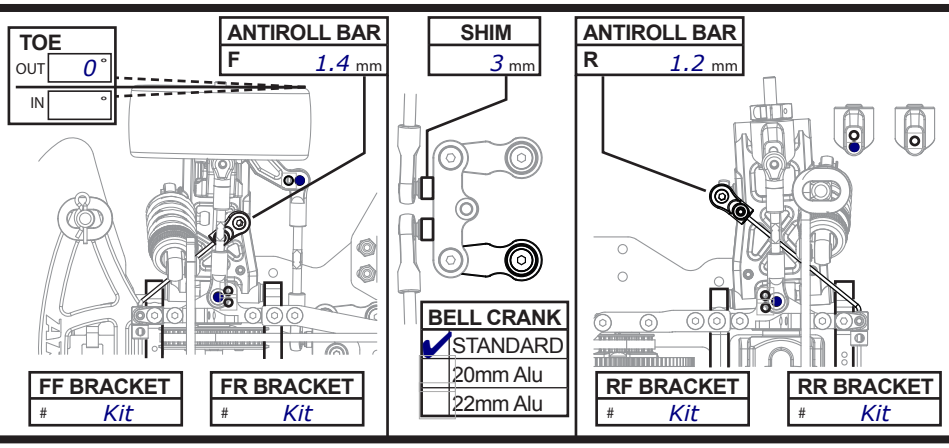

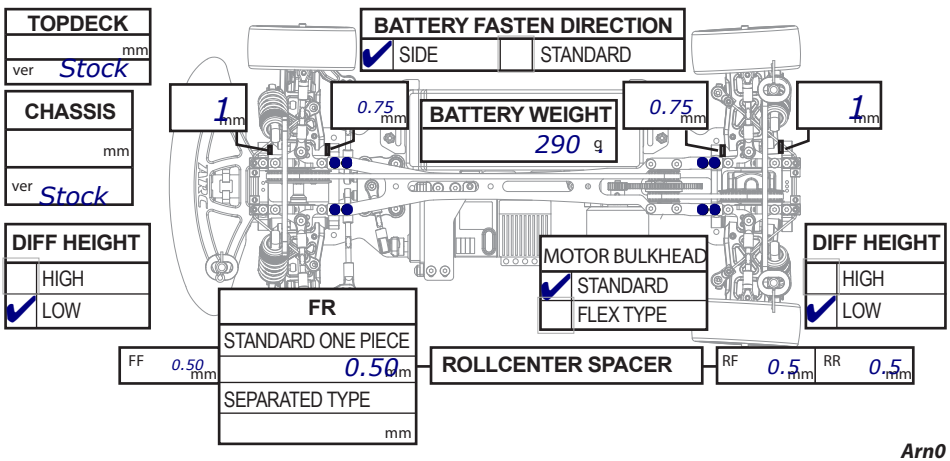

Arn0