R10 2013 SET-UP SHEET

1/10 190mm Electric Touring Car.

ARC

RACE	Friday Culb Night 17,5 Blnky
TRACK	HRCC/RR
NAME	Malc Hall
CITY / COUNTRY	UK
DATE	8th November 2013

TEMPERATURE	AIR	TRACK

QUALIFYING POSITION	BEST LAPTIME	FINAL POSITION	RACE LENGTH
Pole A	8,29 SEC	1st	5 MIN

TRACK CONDITION: ☐ TECHNICAL ☑ CARPET ☑ MIXED ☐ ASPHALT ☐ FAST

TRACTION: ☐ LOW ☑ MEDIUM ☐ HIGH

TRANSMISSION

FRONT GEAR DIFF	REAR GEAR DIFF
☐ CST	☐ 2000 CST

☐ ONE WAY ☑ SPOOL

Number of Gears: ☐ 2 ☑ 4

MOTOR	Team Wave	ESC	HW 3.1
PINION	48 DP / 35 T	SPUR GEAR	48 DP / 70 T
FINAL DRIVE RATIO (Internal Ratio: 2.0)	4.00		

FRONT OIL	FRONT SPRING	SHOCK PISTON	REAR SPRING	REAR OIL
450MM CST	Green		Blue	400MM CST

FRONT: ☑ 3 HOLES ☐ 4 HOLES

REAR: ☑ 3 HOLES ☐ 4 HOLES

HOLE SIZE: 1.1 mm / mm

Sorex	TIRES	32s
Revlite	RIM	Revlite
Blue	INSERTS	Blue
Spider Green	ADDITIVE	Spider Green

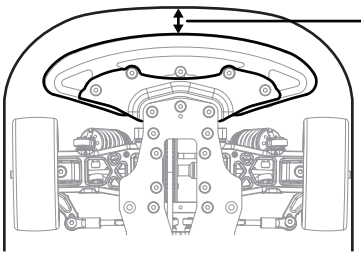

Bumper: ☑ Standard ☐ Cut

BODY MOUNT DISTANCE: mm

BODY	WING
TSX	TSX

NOTE *Alteration by Arn0 at PetitRC.com*

I ran the diff rings with the dot 4 holes from centre so the belts were quite loose
Note the wishbones have been flipped over so the shocks stand up more, this makes the car react very quickly. If you need to calm the front end down a tad, then put antidive on the front, by removing the 1mm shim, and reduce to 0,8mm

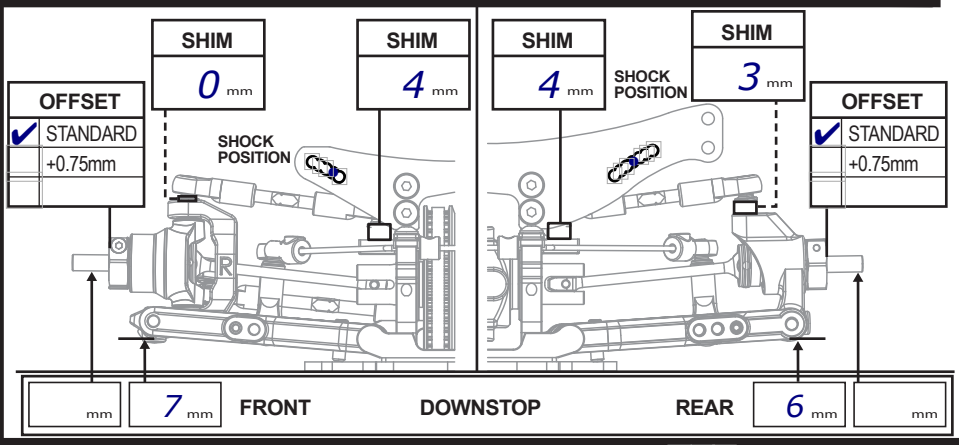

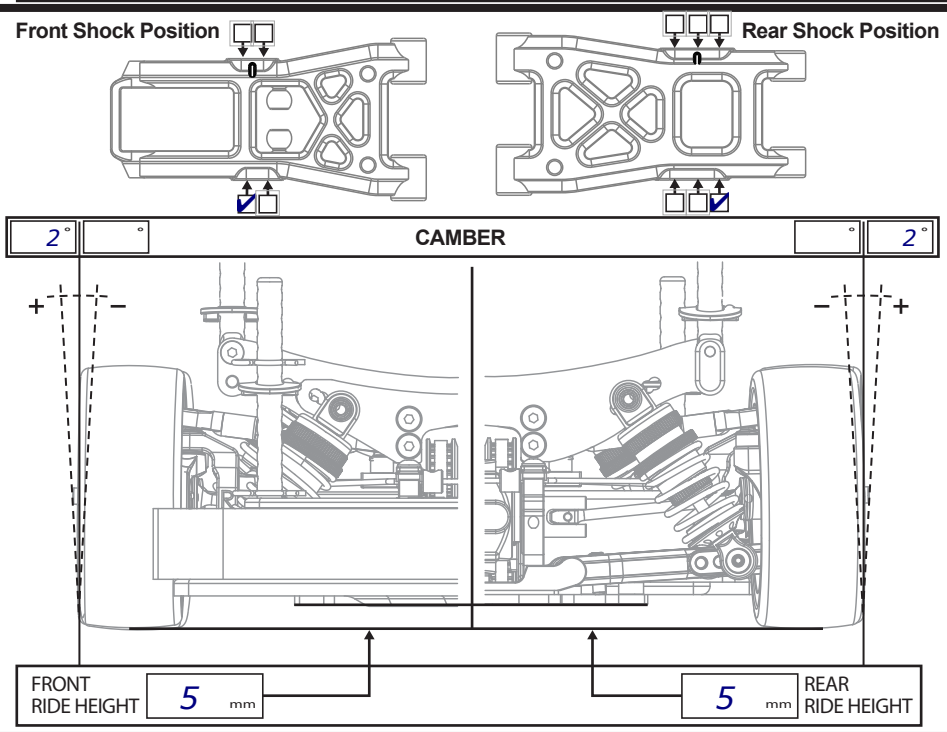

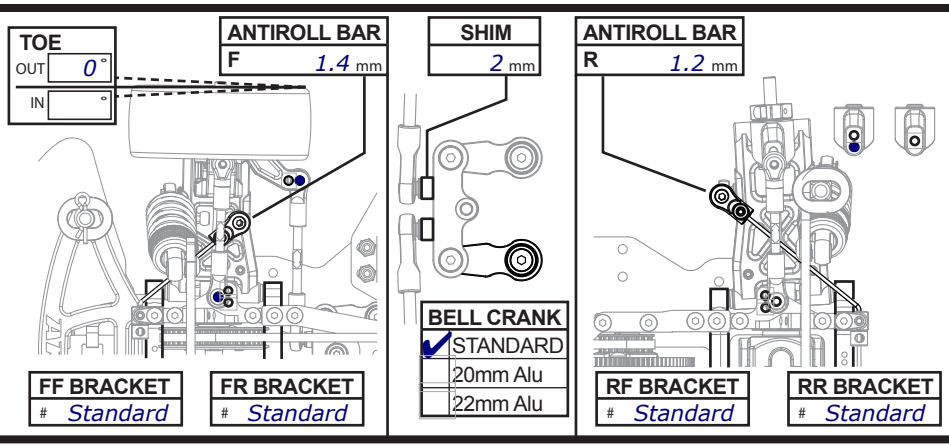

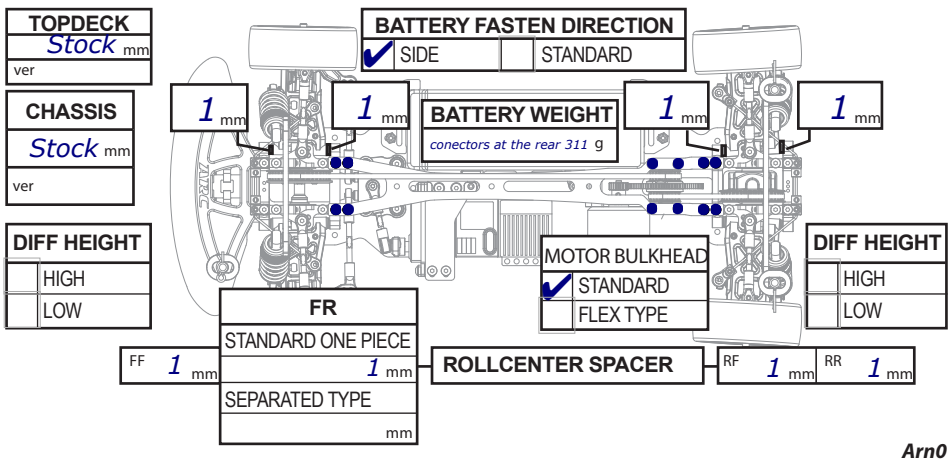

Arn0