R10 2013 SET-UP SHEET

1/10 190mm Electric Touring Car.

ARC

RACE	ETS round 4 - Stock
TRACK	LMCC Luxemburg
NAME	Lars Hoppe
CITY / COUNTRY	
DATE	08. 06. 2014

TEMPERATURE	AIR 35	TRACK

QUALIFYING POSITION	BEST LAPTIME	FINAL POSITION	RACE LENGTH
2	SEC	2	5 MIN

TRACK CONDITION: ☐ TECHNICAL ☐ CARPET ☑ ASPHALT ☐ MIXED ☑ FAST

TRACTION: ☐ LOW ☑ MEDIUM ☑ HIGH

TRANSMISSION

FRONT	REAR
GEAR DIFF	GEAR DIFF
☐ CST	☐ 3000 CST

☐ ONE WAY
☑ SPOOL

Number of Gears: ☐ 2 ☑ 4

MOTOR	13,5 T	ESC	ETS Combo
PINION	48 DP / 32 T	SPUR GEAR	48 DP / 72 T
FINAL DRIVE RATIO (Internal Ratio: 2.0)	4.50		

FRONT		REAR
OIL 30 CST	☐ 3 HOLES ☑ 4 HOLES	☐ 3 HOLES ☑ 4 HOLES OIL 35 CST
SPRING 2.5-2.8	SHOCK PISTON HOLE SIZE: ☑ 1.1 mm ☐ 1,2 mm	SPRING 2.7

Ride Rex34	TIRES	Ride Rex34
	RIM	
	INSERTS	
LRP carpet 2	ADDITIVE	LRP carpet 2

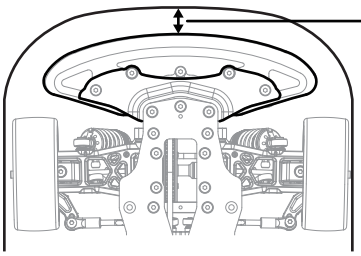

Bumper: ☐ Standard ☑ Cut

BODY MOUNT DISTANCE: 10 mm

BODY	Blitz GSF	WING	Std

NOTE *Alteration by Arn0 at PetitRC.com*

- short xray springs
- all low friction parts
- short shocks with 70% rebound

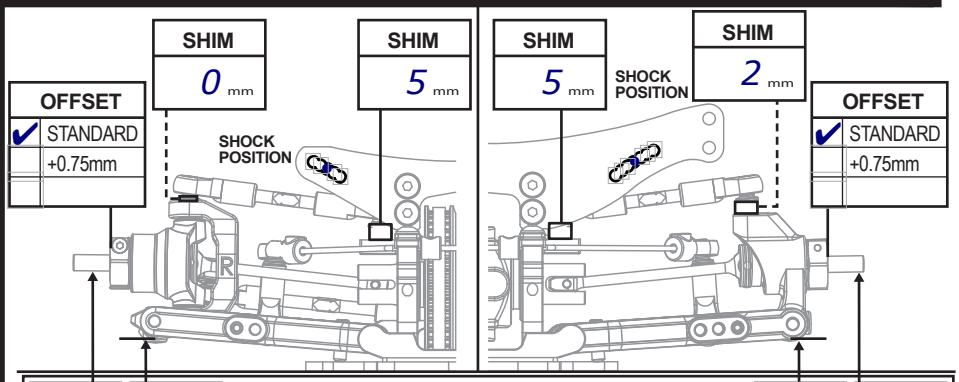

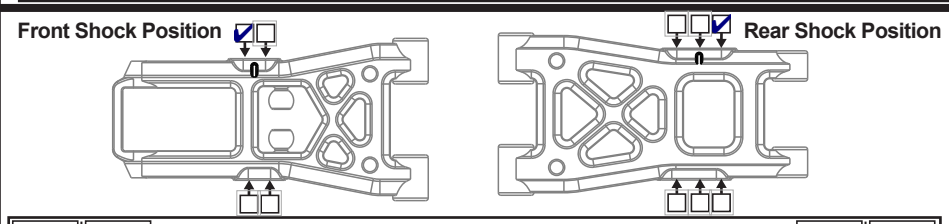

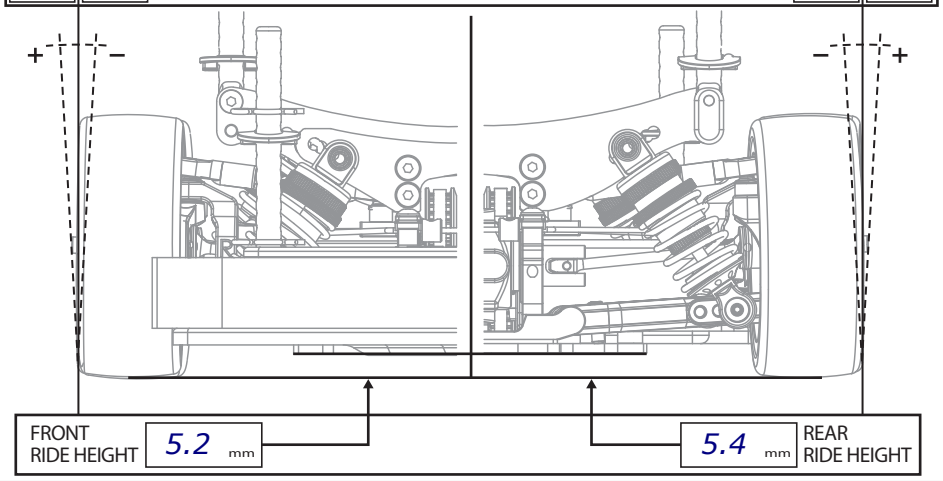

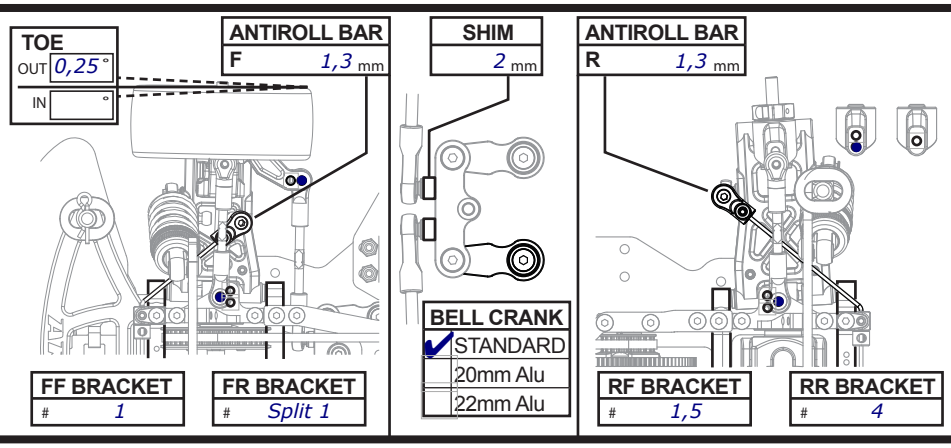

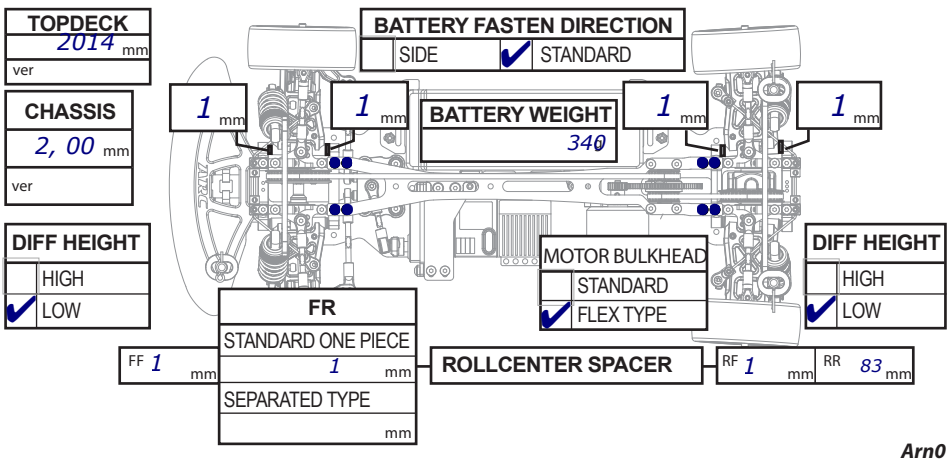

Arn0