R10 2013 SET-UP SHEET

1/10 190mm Electric Touring Car.

ARC

RACE	LRP - Challenge
TRACK	RC-World OHZ-Bremen (Fair)
NAME	Lars Hoppe
CITY / COUNTRY	
DATE	17.11.2013

TEMPERATURE	AIR 20	TRACK

QUALIFYING POSITION	BEST LAPTIME	FINAL POSITION	RACE LENGTH
2	13,2 SEC	1	5 / 7 MIN

TRACK CONDITION: ☑ CARPET ☐ ASPHALT ☑ TECHNICAL ☐ MIXED ☐ FAST

TRACTION: ☐ LOW ☑ MEDIUM ☐ HIGH

TRANSMISSION

FRONT	REAR
GEAR DIFF ☐ CST	GEAR DIFF ☐ 2000 CST
☐ ONE WAY	Number of Gears
☑ SPOOL	☐ 2 ☑ 4

MOTOR	LRP X20 10,5t	ESC	LRP Flow
PINION	48 DP / 27 T	SPUR GEAR	48 DP / 72 T
FINAL DRIVE RATIO (Internal Ratio: 2.0)	5.33		

FRONT		REAR
OIL 350 CST	☑ 3 HOLES ☐ 4 HOLES	☑ 3 HOLES ☐ 4 HOLES OIL 350 CST
SPRING Yokomo pink	SHOCK PISTON HOLE SIZE: 1.1 mm / ☑ 1,2 mm	SPRING Yokomo blue

VTEC CPX	TIRES	VTEC CPX
	RIM	
	INSERTS	
LRP Carpet 3	ADDITIVE	LRP Carpet 3

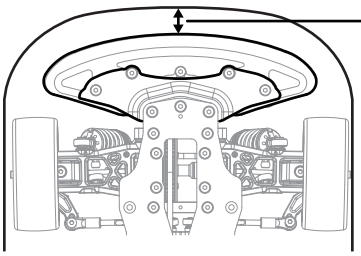

Bumper: ☑ Standard ☐ Cut

BODY MOUNT DISTANCE: 11 mm

BODY	HB09x	WING	Std.

NOTE

Alteration by Arn0 at PetitRC.com

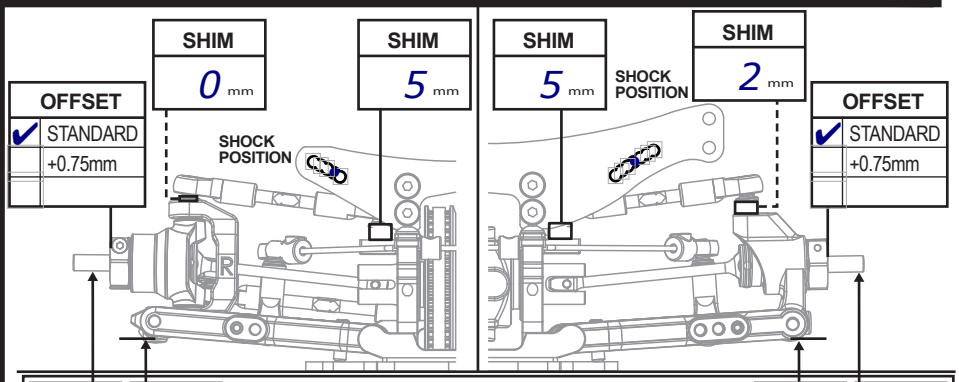

mm	5,5 mm	FRONT	DOWNSTOP	REAR	5 mm	mm

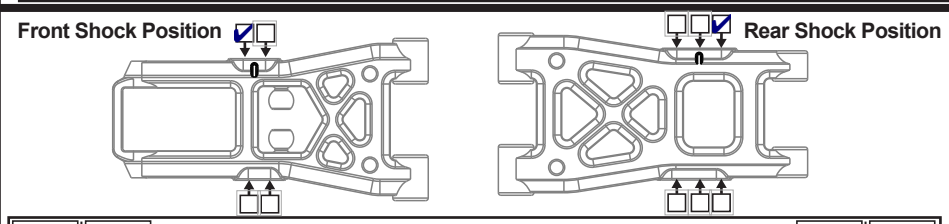

°	1,5°	CAMBER	2,25°	°

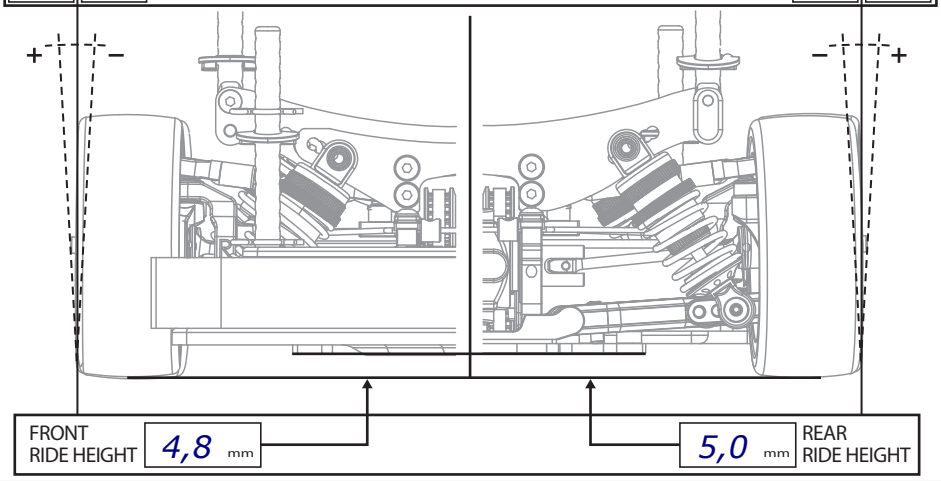

FRONT RIDE HEIGHT	4,8 mm	5,0 mm	REAR RIDE HEIGHT

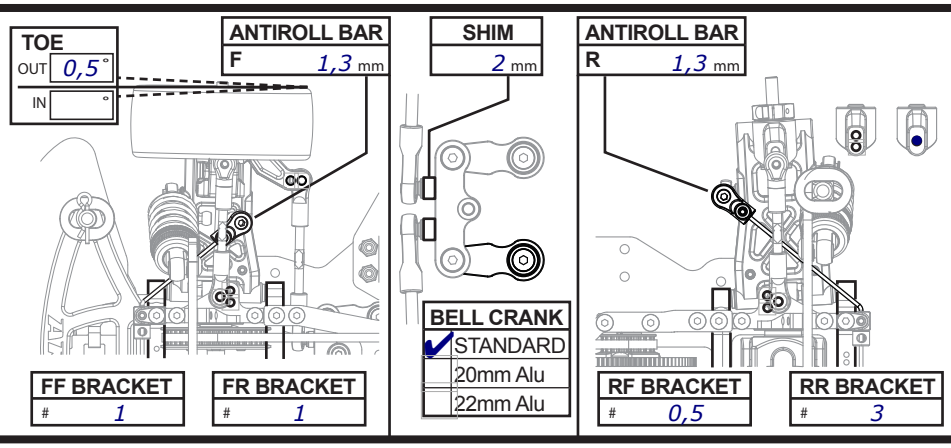

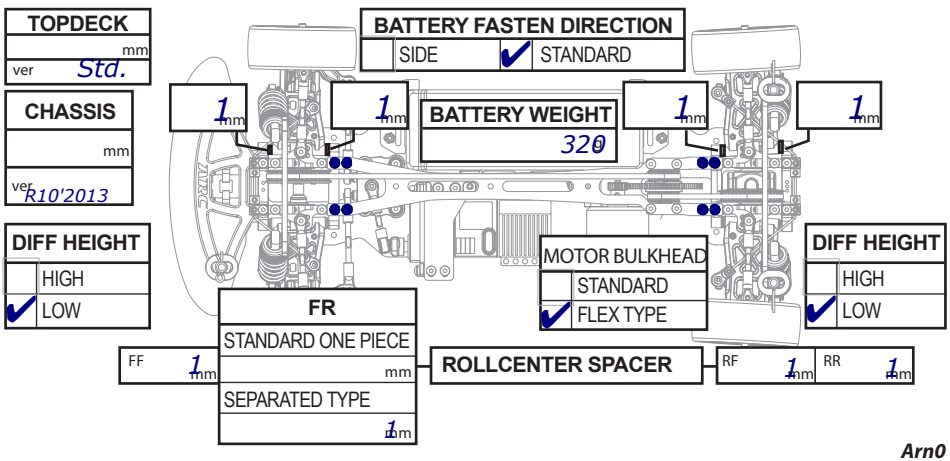

Arn0