R10 2013 SET-UP SHEET

1/10 190mm Electric Touring Car.

ARC

RACE	Ride Cup Round3
TRACK	Huge R/C Track
NAME	Jones Chu
CITY / COUNTRY	Taiwan
DATE	2013/11/06

TEMPERATURE	AIR	TRACK

QUALIFYING POSITION	BEST LAPTIME	FINAL POSITION	RACE LENGTH
10th	15.9 SEC	7th	5 MIN

TRACK CONDITION: [ ] TECHNICAL [ ] CARPET [x] MIXED [x] ASPHALT [ ] FAST

TRACTION: [ ] LOW [x] MEDIUM [ ] HIGH

TRANSMISSION

FRONT GEAR DIFF	REAR GEAR DIFF
[ ] CST	[ ] 2000 CST

[ ] ONE WAY
[x] SPOOL

Number of Gears: [ ] 2 [x] 4

PINION	35 T	SPUR GEAR	102 T
R10 Internal Ration	2.0		
FINAL DRIVE RATIO	5.82		

FRONT		REAR
OIL: 350 CST		OIL: 350 CST
[x] 3 HOLE [ ] 4 HOLE	SHOCK PISTON	[x] 3 HOLE [ ] 4 HOLE
SPRING: Green	HOLE SIZE: 1.1 mm / mm	SPRING: Green

REX34	TIRES	REX34
	RIM	
C30	INSERTS	C30
LRP	ADDITIVE	CARPET 3

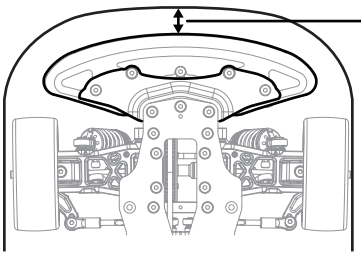

Bumper: [ ] Standard [x] Cut

BODY MOUNT DISTANCE: 8 mm

BODY	GSF	WING	Standard

NOTE

1.D.J CVD both Front and rear.
2.Low friction pulley set .

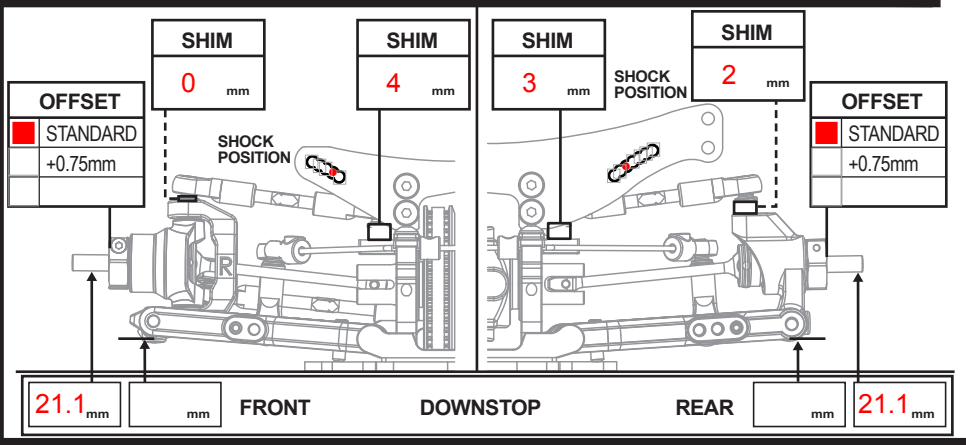

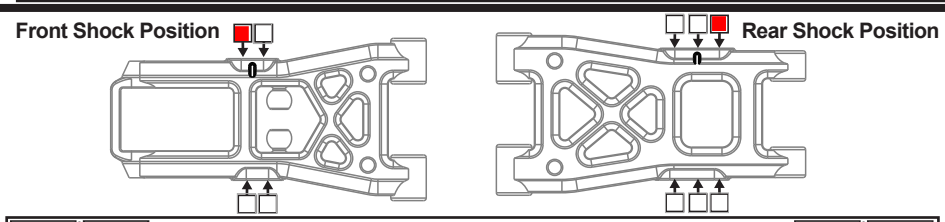
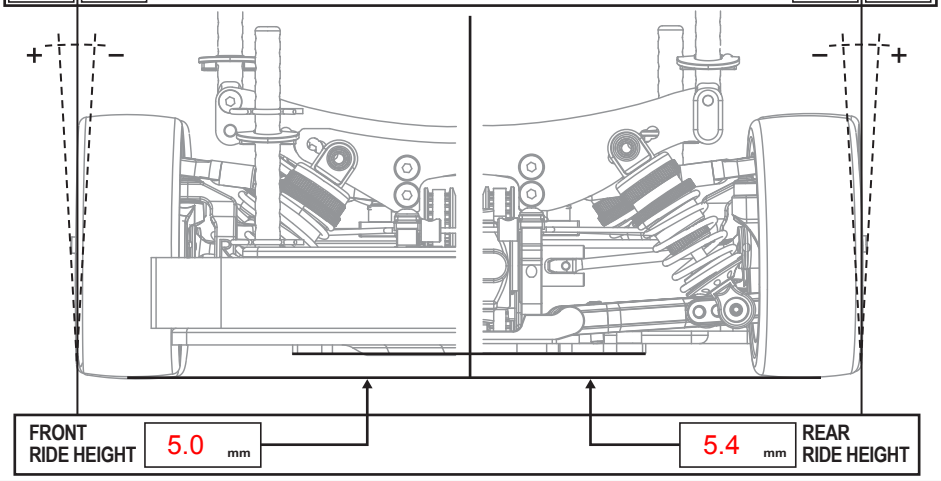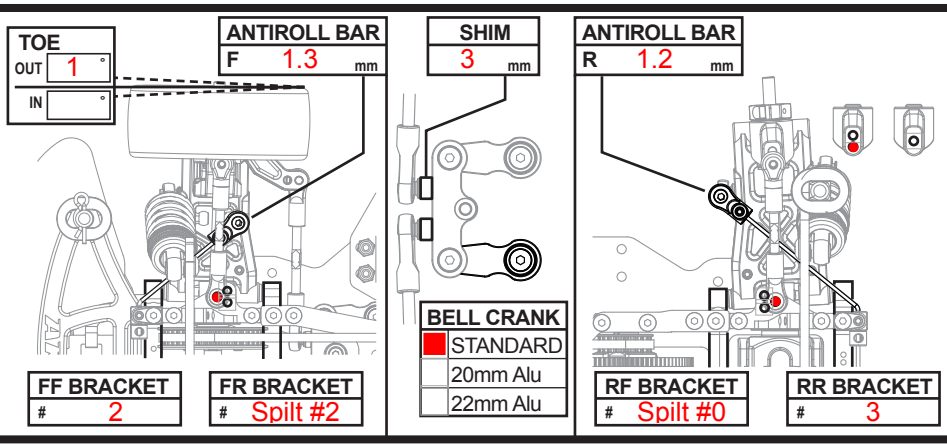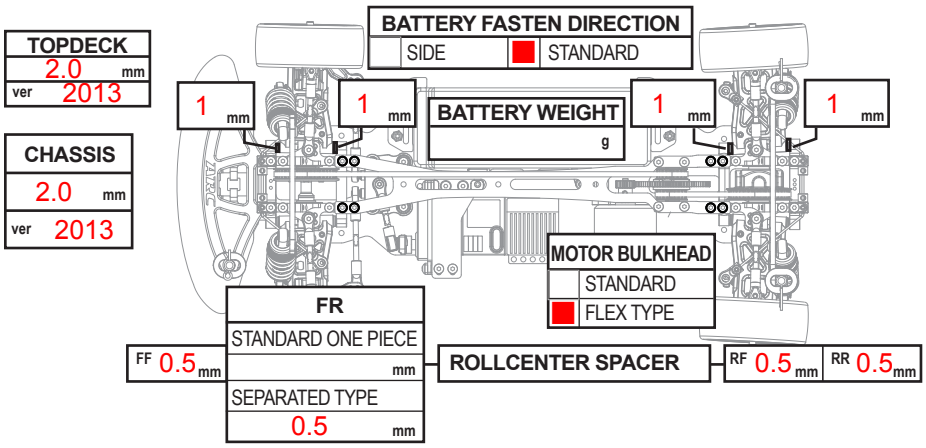
CAMBER: 2 ° | 2.5 °