R10 2013 SET-UP SHEET

1/10 190mm Electric Touring Car.

ARC

RACE	EC eletric touring car
TRACK	Miniautodromo Torres Novas
NAME	Hugo Miguel
CITY / COUNTRY	Torres Novas - Portugal
DATE	1-4 August 2013

TEMPERATURE	AIR 30	TRACK

QUALIFYING POSITION	BEST LAPTIME	FINAL POSITION	RACE LENGTH
25th	14.999 SEC	25th	5 MIN

TRACK CONDITION: [ ] TECHNICAL [ ] CARPET [✓] MIXED [✓] ASPHALT [ ] FAST

TRACTION: [✓] LOW [✓] MEDIUM [ ] HIGH

FRONT	REAR
TRANSMISSION	
GEAR DIFF	GEAR DIFF
[ ] CST	[ ] 3500 Tornado CST
[ ] ONE WAY	Number of Gears
[✓] SPOOL	[ ] 2 [✓] 4

PINION	20 T	SPUR GEAR	83 T
R10 Internal Ration	2.0		
FINAL DRIVE RATIO	40.00		

FRONT			REAR
OIL: 35losi CST	[ ] 3 HOLE [✓] 4 HOLE	SHOCK PISTON	[ ] 3 HOLE [✓] 4 HOLE	OIL: 35losi CST
SPRING: green		HOLE SIZE: [✓] 1.1 mm [ ] mm		SPRING: green

	TIRES	LRP33X
	RIM	
	INSERTS	
	ADDITIVE	

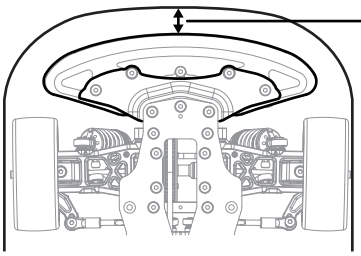

Bumper: [ ] Standard [✓] Cut

BODY MOUNT DISTANCE: 55mm to edge of chassis mm

BODY	LTCR	WING	std

NOTE — Alteration by Arn0 at PetitRC.com

DJ CVD
flex motor mount
alu ball ends on upper camber links
bump steer 3mm
1390g with motor cooling fan
final gear ratio: 8.3:1
motor: thunderpower 4.5 (22.5º timing)
HW V3 Esc settings:
1/1/25/4/4/50/9/13/1/2/17/7/1/50/13/1
6/1/31/19/64/1/1/1/14/1/6/3

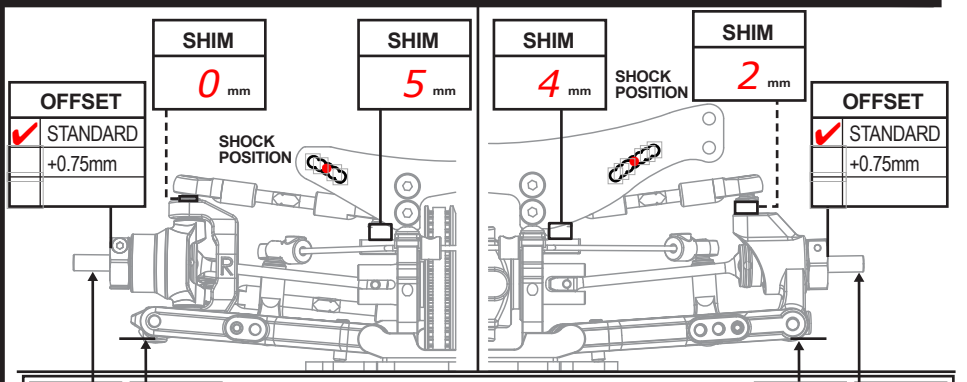

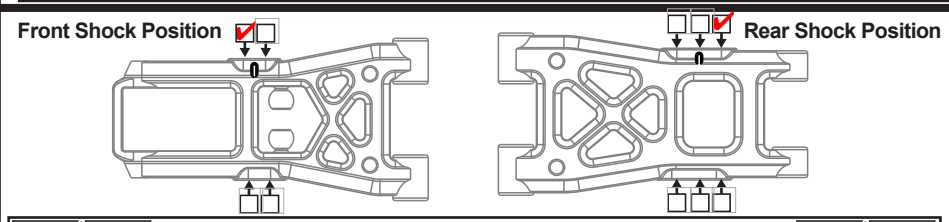
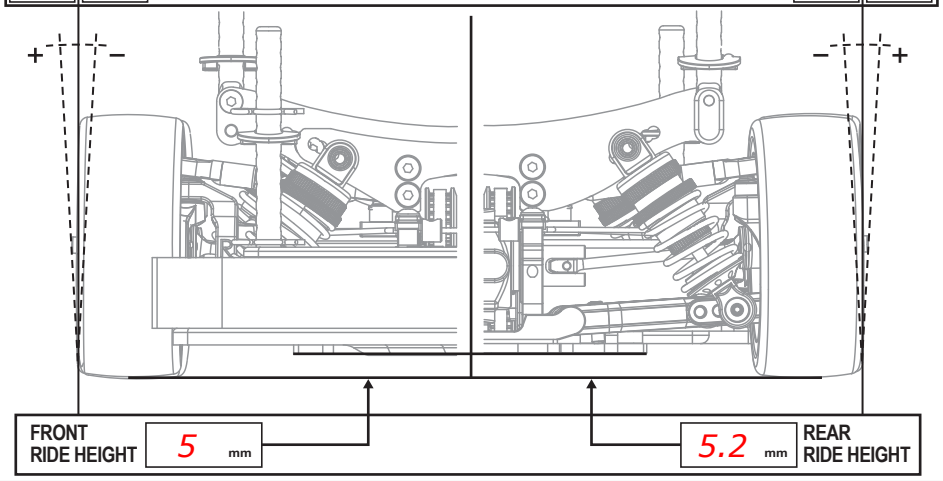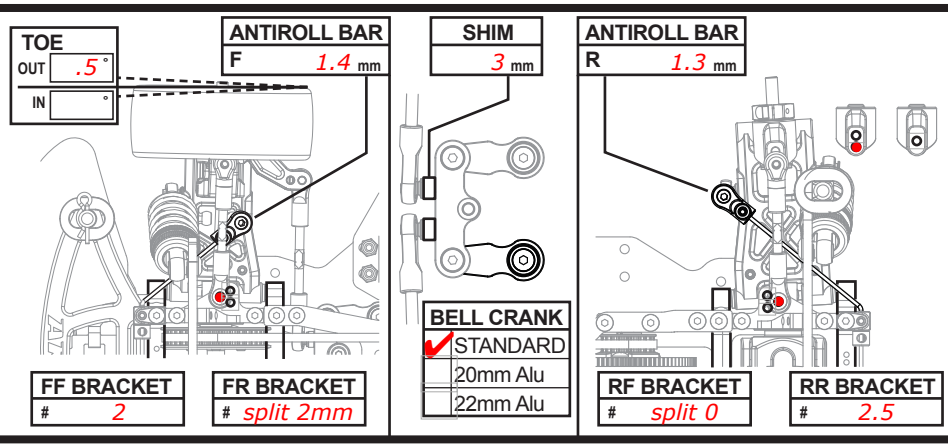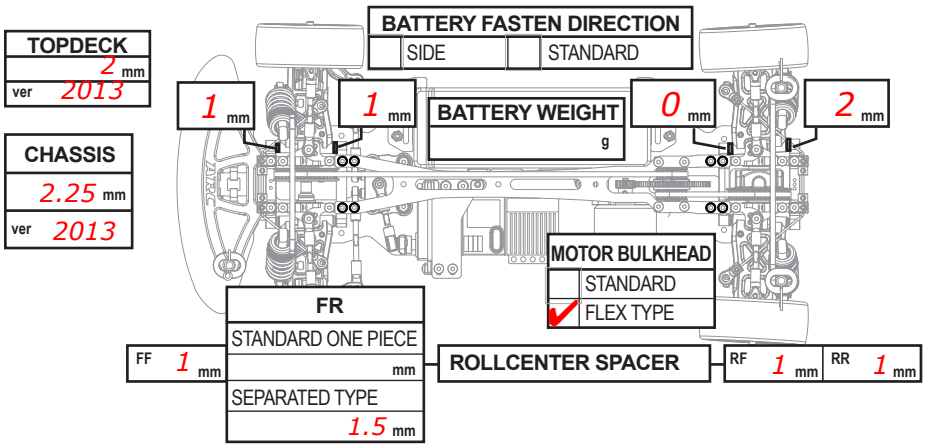
CAMBER: ° | 1.5° | 2° | °