R10 2013 SET-UP SHEET

1/10 190mm Electric Touring Car.

ARC

RACE	ETS LUX
TRACK	
NAME	Spashett
CITY / COUNTRY	
DATE	

TEMPERATURE	AIR	TRACK

QUALIFYING POSITION	BEST LAPTIME SEC	FINAL POSITION	RACE LENGTH MIN

TRACK CONDITION: ☐ TECHNICAL ☐ CARPET ☐ MIXED ☐ ASPHALT ☑ FAST

TRACTION: ☑ LOW ☐ MEDIUM ☐ HIGH

FRONT	REAR
TRANSMISSION	
GEAR DIFF	GEAR DIFF
☐ CST	☐ 5K Ultimate CST
☐ ONE WAY	Number of Gears
☐ SPOOL	☐ 2 ☐ 4

PINION	23 T	SPUR GEAR	84 T
R10 Internal Ration	2.0		
FINAL DRIVE RATIO			

FRONT			REAR
OIL 450 CST	☐ 3 HOLE ☐ 4 HOLE	SHOCK PISTON	☐ 3 HOLE ☐ 4 HOLE	OIL 400 CST
SPRING ARC Yello		HOLE SIZE ☐ 1.1 mm ☐ mm		SPRING Green ARC

Ride	TIRES	Ride
	RIM	
	INSERTS	
LRP	ADDITIVE	LRP

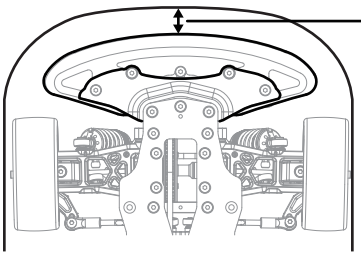

Bumper: ☐ Standard ☐ Cut

BODY MOUNT DISTANCE: 7 mm

BODY	BLITZ GSF	WING	Standard

NOTE

Front D.J CVD
Losi Shock Oil 35FR 32.5R
No shock rebound caps drilled
Steering lock limited to 26-27deg inside wheel with stops
Hard Arms
Rear Diff low position

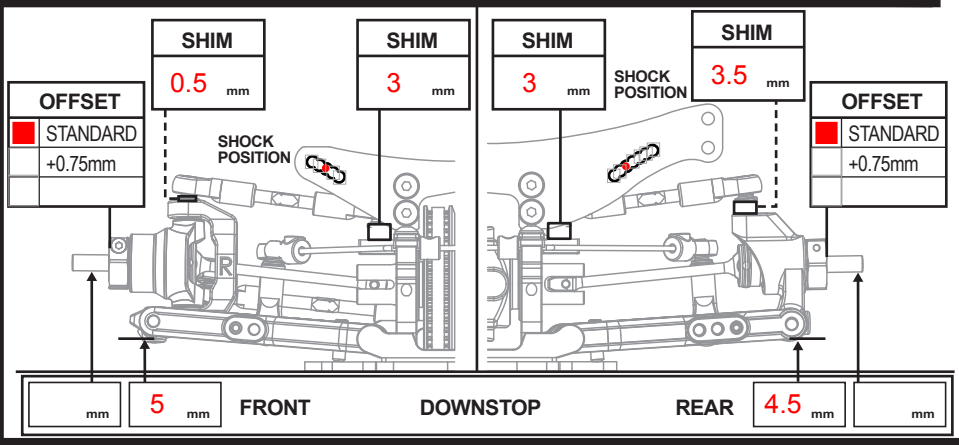

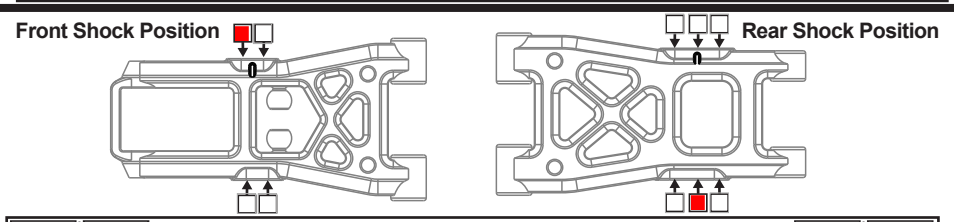
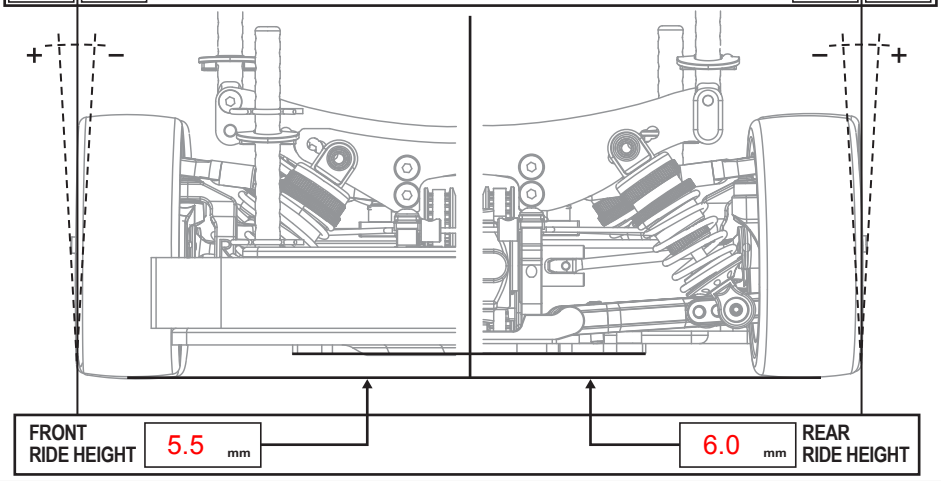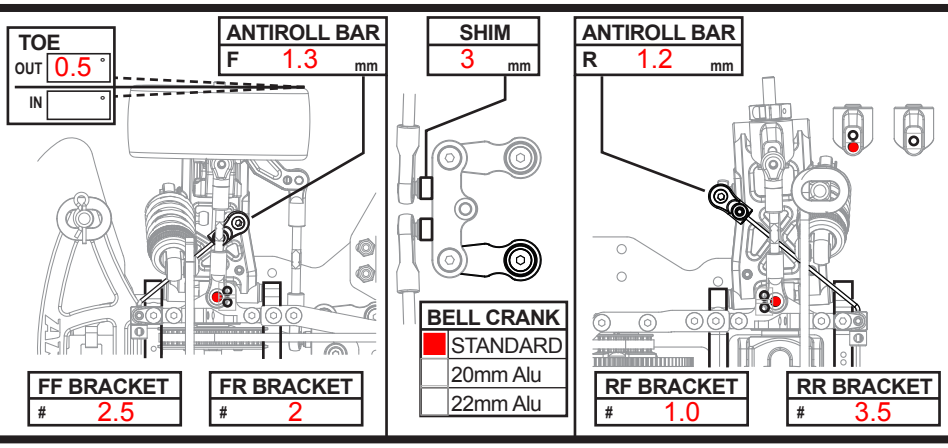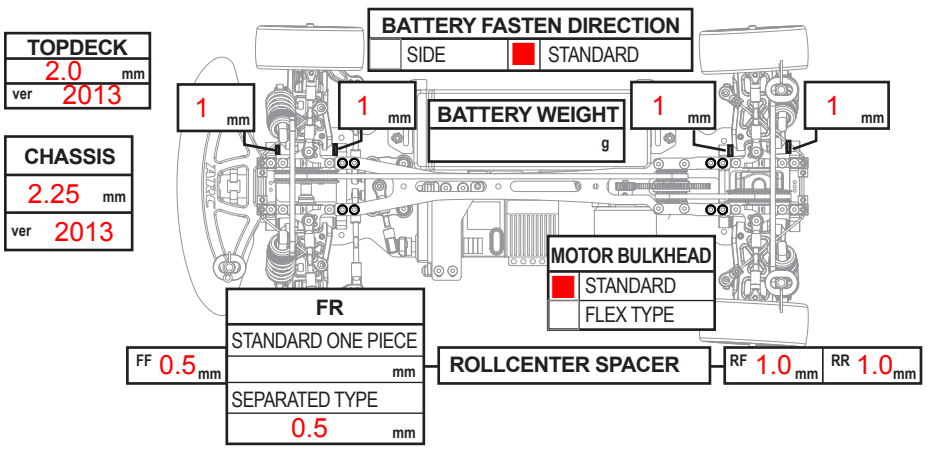
°	1.5 °	CAMBER	1.5 °	°