R10 2013 SET-UP SHEET

1/10 190mm Electric Touring Car.

ARC

RACE	3º ESPAÑA BARAKALDO
TRACK	CAR10
NAME	CARLOS ATIENZA
CITY / COUNTRY	BARCELONA (SPAIN)
DATE	08/09/2013

TEMPERATURE	AIR 20	TRACK

QUALIFYING POSITION	BEST LAPTIME	FINAL POSITION	RACE LENGTH
5	16.992 SEC	5	5 MIN

TRACK CONDITION: [ ] CARPET [x] ASPHALT [x] TECHNICAL [ ] MIXED [ ] FAST

TRACTION: [ ] LOW [x] MEDIUM [x] HIGH

TRANSMISSION

FRONT	REAR
GEAR DIFF	GEAR DIFF
[ ] CST	[ ] 5000 CST
[ ] ONE WAY	Number of Gears
[x] SPOOL	[ ] 2 [x] 4

PINION	40 T	SPUR GEAR	100 T
R10 Internal Ration	2.0		
FINAL DRIVE RATIO	5		

FRONT			REAR
OIL 450 CST	[x] 3 HOLE [ ] 4 HOLE	SHOCK PISTON	[x] 3 HOLE [ ] 4 HOLE	OIL 400 CST
SPRING GREEN		HOLE SIZE 1.1 mm / mm		SPRING GREEN

LRP 33X	TIRES	LRP 33X
	RIM	
	INSERTS	
NO	ADDITIVE	NO

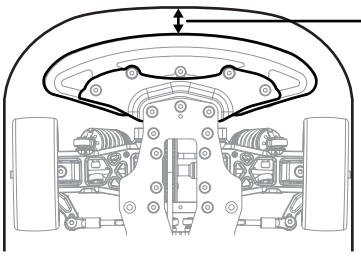

Bumper: [x] Standard [ ] Cut

BODY MOUNT DISTANCE: mm

BODY	WRX	WING	STD

NOTE

OPTIONS USED:
R109009 R109022 R104053 R104057 R102811
TiTAN TITANIUM SCREWS FULL SET

WITH MORE TRACTION PUT 7000CST

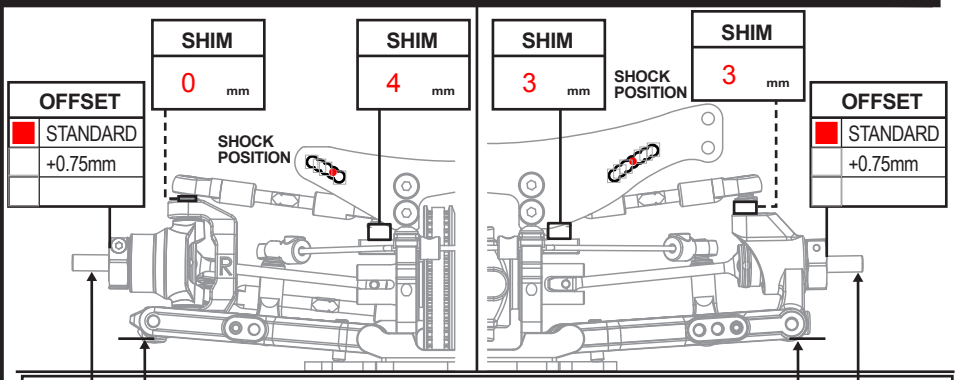

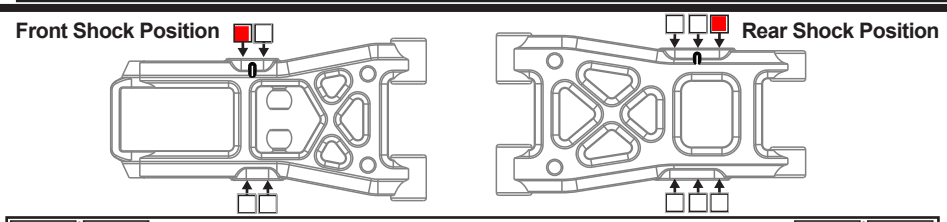
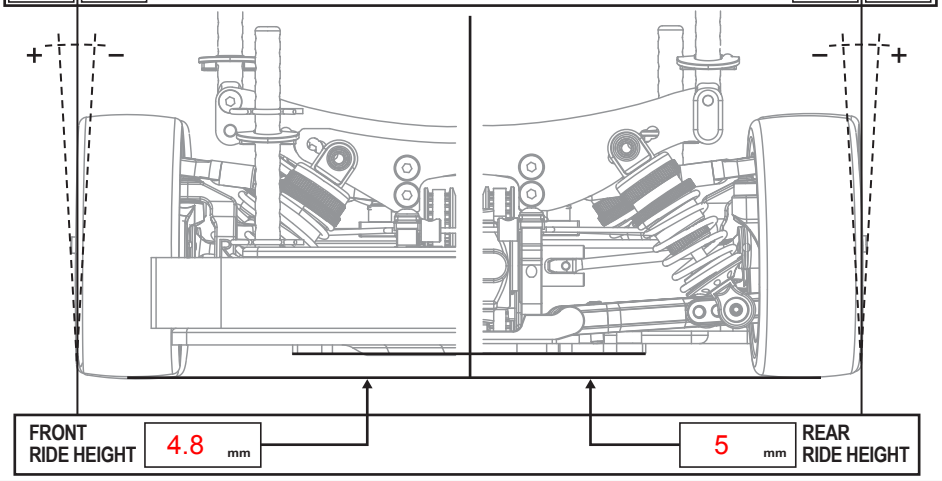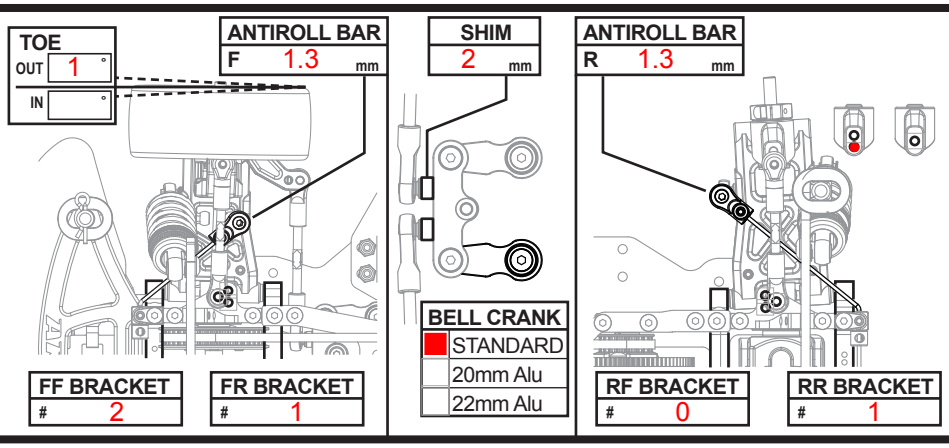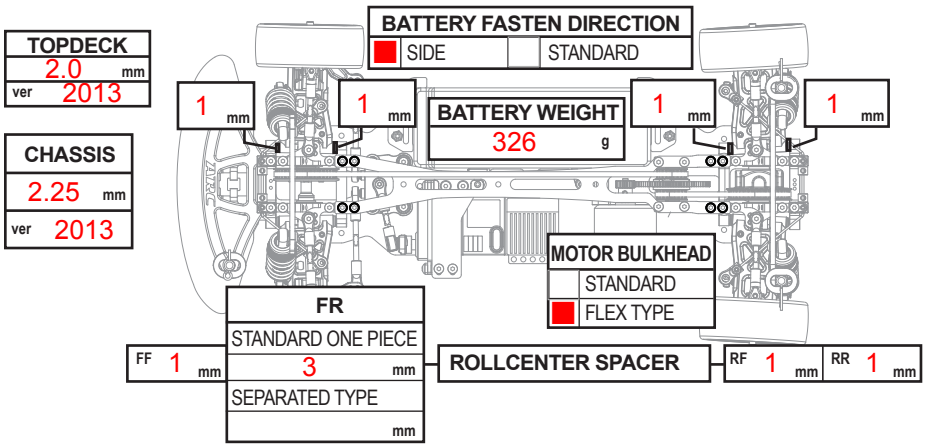
CAMBER: ° 1 ° | 2 °